SINCE 1839
BRINLY

OWNER'S MANUAL

LAWN AERATOR

MODEL:

PA-40 BH
PA-48 BH

- Assembly
- Installation
- Operation
- Repair Parts

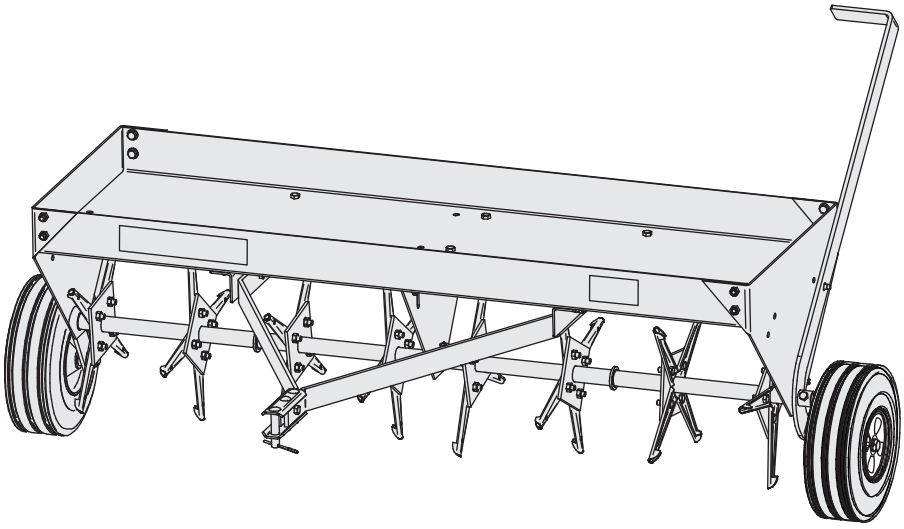

For use with Riders
and Lawn/Garden Tractors

Call Customer Service, Toll-Free: 877-728-8224

Visit us on the web!
www.brinly.com

Important: This manual contains information for the safety of persons and property. Read it carefully before assembly and operation of the equipment!

INDRODUCTION

CONGRATULATIONS on the purchase of your new Brinly-Hardy Plug Aerator! This accessory has been designed, engineered and manufactured to give you the best possible dependability and performance.

Should you experience any problem you cannot easily remedy, please do not hesitate to contact our knowledgeable customer service department toll-free at 1-877-728-8224. We have competent, well trained technicians to help you with the assembly and use of your Plug Aerator.

CUSTOMER RESPONSIBILITIES

- Please read & retain this manual. The instructions will enable to assemble and maintain your product properly.
- Please carefully read and observe the SAFETY SECTION of this manual.
- Follow a regular schedule in maintaining and caring for your Brinly-Hardy product.

TABLE OF CONTENTS

Safety 2-3
Specifications 4
Hardware Identifier 5-6

PA-40BH
Assembly 7-14

PA-48BH
Assembly 15-22

Operation, Maintenance and Service 23-25
Parts List 26-27
Limited Warranty 28

REQUIRED TOOLS FOR ASSEMBLY

- 7/16” Wrench
- 7/16” Socket & Ratchet
- 9/16” Wrench
- 9/16” Socket & Ratchet
- 1/2” Socket & Ratchet
- Pliers
- Gloves

RECORD PURCHASE INFORMATION

Record your purchase information in the spaces provided below:

DATE OF PURCHASE _____

COMPANY NAME _____

SERIAL NUMBER _____

CO. PHONE _____

SAFETY LABELS AND NOTATION

This symbol will help to point out important safety precautions throughout this manual. It means: **ATTENTION! BECOME ALERT! Your safety is involved.**

The safety labels shown in this section are placed in important areas on your product to draw attention to potential safety hazards.

On your product safety labels, the words **DANGER**, **WARNING** and **CAUTION** are used with the safety-alert symbol. DANGER identifies the most serious hazards.

The operator’s manual also explains any potential safety hazards whenever necessary in special safety messages that are identified with the word, **CAUTION**, and the safety-alert symbol.

GENERAL NOTES (OPERATION)

Caution should be taken when towing and/or using any attachment. This attachment combined with the weight distribution, turning radius, and speed of towing vehicle can result in severe injury or death to operator, damage to towing vehicle, and/or attachment if not used properly. Follow all towing safety precautions noted in the towing vehicle owner’s manual, including the following precautions:

- Ensure the combined weight of the towing vehicle (tow vehicle weight + operator weight) is greater than the maximum towed weight of attachment (empty attachment weight + weight of load).
- Do not exceed maximum towing capacity of towing vehicle.

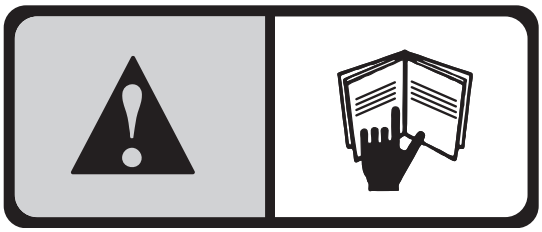

- Do not exceed the maximum drawbar pull rating of the towing vehicle. Drawbar pull is the horizontal force required to pull the attachment (including weight of load).
- Only tow this product in the vehicle's tow mode/speed setting or less than 5 mph. Do not exceed 5 mph.
- Towing speed should always be slow enough to maintain control. Travel slowly and use caution when traveling over rough terrain. Avoid holes, rocks and roots.
- Slow down before you turn and do not turn sharply.
- Use wide turning angles to ensure the attachment follows the path of the towing vehicle.
- Do not use attachment on steep slopes. A heavy load could cause loss of control or overturn attachment and towing vehicle. Additional weights may need to be added to your vehicle; check with towing vehicle manufacturer for recommendations.
- Reduce towed weight when operating on slopes.
- Keep all movement on slopes slow and gradual. Do not make sudden changes in speed, directions, or turning.
- If you start and stop suddenly on hills, you may lose steering control or the towing vehicle may tip.
- Do not start or stop suddenly when going uphill or downhill. Avoid uphill starts.
- Slow down and use extra care on hillsides. Turf conditions can affect vehicle stability. Use extreme caution while operating near drop-offs.
- Do not drive close to creeks, ditches and public highways.
- Watch out for traffic when crossing near roadways.
- Use care when loading or unloading the vehicle into a trailer or truck.
- The attachment can obstruct the view to the rear. Use extra care when operating in reverse.
- When reversing, carefully back-up straight to avoid jackknifing. Do not allow towing vehicle wheels to contact attachment draw bar. Damage could result.
- Stop on level ground, disengage drives, set the parking brake, and shut off engine before leaving the operator's position for any reason including emptying the attachment.
- Use this attachment for intended purpose only.
- This attachment is intended for use in lawn care and home applications. Do not tow behind a vehicle on a highway or in any high speed applications.
- Do not tow at speeds higher than the maximum recommended towing speed.
- Do not tow this product behind a motor vehicle such as a car or truck.
- Always wear substantial footwear. Do not wear loose fitting clothing that can get caught in moving parts.
- Keep your eyes and mind on your towing vehicle, attachment and area being covered. Do not let other interests distract you.
- Stay alert for holes and other hidden hazards in the terrain
- Keep the towing vehicle and attachment in good operating condition and keep safety devices in place.
- The towing vehicle and attachment should be stopped and inspected for damage after striking a foreign object. Any damage should be repaired before restarting and operating the equipment.
- Keep all parts in good condition and properly installed. Fix damaged parts immediately. Replace worn or broken parts. Replace all worn or damaged safety and instruction decals. Keep all nuts, bolts and screws tight.
- Do not modify the attachment or safety devices. Unauthorized modifications to the towing vehicle or attachment may impair its function, safety and void the warranty.

TOWING VEHICLE AND TOWING SAFELY

- Know your towing vehicle controls and how to stop safely. READ YOUR TOWING VEHICLE OWNER'S MANUAL before operating.
- Check the towing vehicle brake action before you operate. Adjust or service brakes as necessary.
- Stopping distance increases with speed and weight of towed load. Travel slowly and allow extra time and distance to stop.
- Use only approved hitches. Tow this attachment only with a towing vehicle that has a hitch designed for towing. Do not connect this attachment except at the approved hitch point.
- Follow the tow vehicle manufacture's recommendations for weight limits for towed equipment and towing on slopes. Use counterweights or wheel weights as described in the towing vehicle operator's manual.
- Do not shift to neutral and coast downhill.
- Do not allow children to operate the towing vehicle. Do not allow adults to operate the towing vehicle without proper instruction or without having read the owner's manual.

PROTECT THOSE AROUND YOU

- Before you operate any feature of this attachment or towing vehicle, observe your surroundings and look for bystanders.
- Keep children, bystanders and pets at a safe distance away while operating this or any attachment.
- Use care when reversing. Before you back up, look carefully behind for bystanders.

KEEP RIDERS OFF TOWED ATTACHMENT & TOWING VEHICLE

- Do not carry passengers.
- Do not let anyone, especially children, ride in/on this attachment, the towing vehicle or hitch bracket. Riders are subject to injury such as being struck by foreign object and/or being thrown off during sudden starts, stops and turns. Riders may also obstruct the operator's view resulting in this attachment being operated in an unsafe manner.

KEEP BODY PARTS FROM UNDER TOWBAR

Before disconnecting this machine from towing vehicle hitch plate:

- Stop on level ground.
- Stop towing vehicle engine
- Lock towing vehicle park brake.
- Block wheels of the machine.
- Make sure body parts are not under towbar.

SPECIFICATIONS

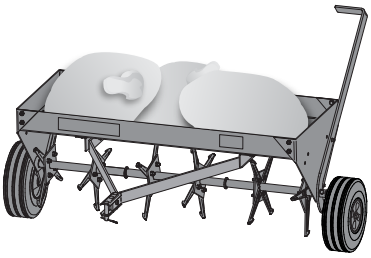

MODEL: ***PA-40 BH***

Maximum Towing Speed	5 MPH
Aerator Capacity	150 lbs.
Empty Weight	66 lbs.
Maximum Towing Weight	216 lbs.
Type of Tire	Semi Pneumatic

Online Info + Video Links

150 lb WEIGHT CAPACITY

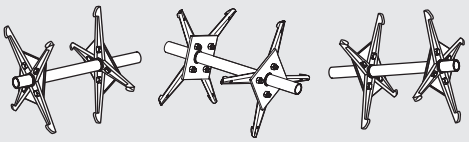

3 Sets of Tube Assemblies

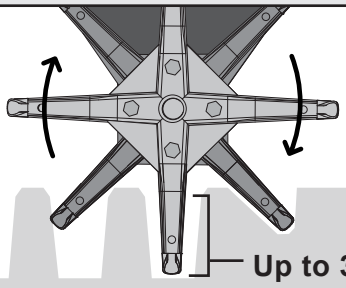

Aeration Depth	Up to 3”
Working Width	40”

Assembly steps begin on page 7

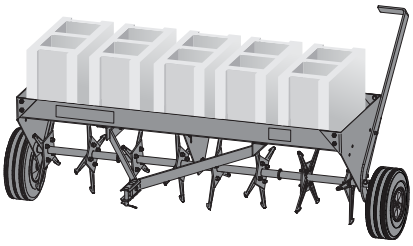

MODEL: ***PA-48 BH***

Maximum Towing Speed	5 MPH
Aerator Capacity	200 lbs.
Empty Weight	90 lbs.
Maximum Towing Weight	290 lbs.
Type of Tire	Semi Pneumatic

Online Info + Video Links

200 lb WEIGHT CAPACITY

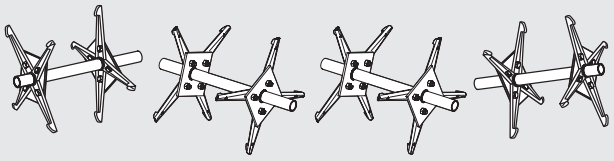

4 Sets of Tube Assemblies

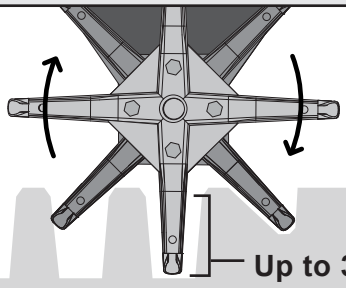

Aeration Depth	Up to 3”
Working Width	48”

\+ Has a Center Support Plate

Assembly steps begin on page 16

TEAR OUT THIS PAGE

Illustrations on this page are to-scale for faster identification of hardware during assembly. ***Tear out this page for quick reference.***

Simply lay the hardware directly on top of the illustrations below to verify you're using the correct parts.

(23) Washer: Lock 5/8" ***40M2000P***

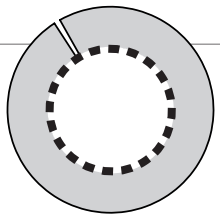

(24) Washer: Flat 5/16" ***45M1111P***

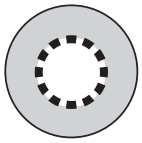

(25) Washer: Flat 5/8" ***45M2121P***

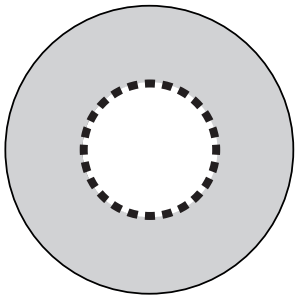

(26) Bushing 3/4" ***B-676P***

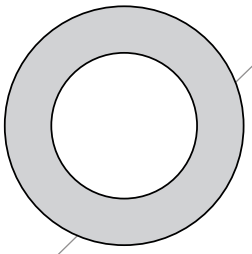

Exterior circumferences of washers can vary. These dimensions are a measurement of the internal diameter of the washer.

(22) Bolt: Hex Head, 5/8 x 4" ***2M2064P***

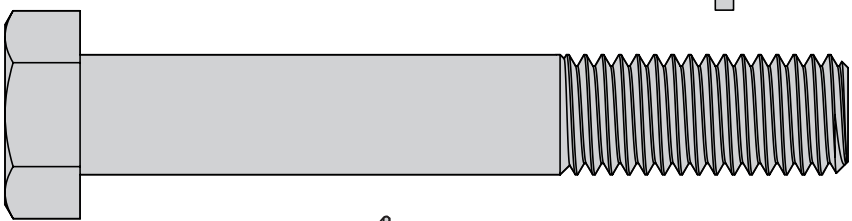

(29) Carriage Bolt: 5/16 x 2 1/4" ***11M1036P***

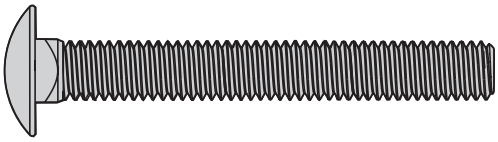

(28) Nut: Hex Lock: 5/16" ***B-1674P***

(30) Nut: Hex Lock: 5/8" ***30M2000P***

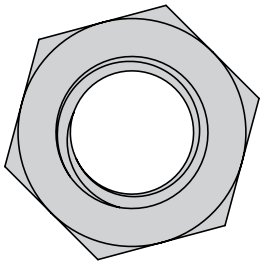

(32) Nut: Nylon Lock: 5/16" ***B-4786***

(8) Bolt: Hex Head, 5/16 x 1" ***2M1016P***

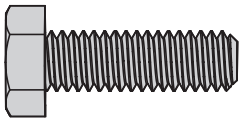

(19) Bolt: Hex Head, 5/16 x 1 1/2" ***2M1024P***

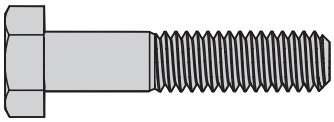

(20) Bolt: Hex Head, 5/16 x 3/4" ***2M1012P***

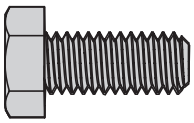

(21) Bolt: Hex Head, 5/16 x 1 1/4" ***2M1020P***

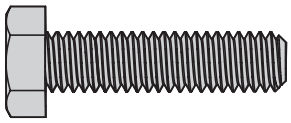

(27) Transport Lock Pin ***B-3307-S***

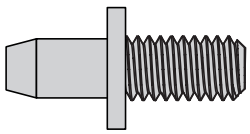

PART IDENTIFIER

REF	DESCRIPTION	PA-40BH PART NO.	PA-40BH QTY	PA-48BH PART NO.	PA-48BH QTY
2	Clevis	R-892-10	2	R-892-10	2
5	Side Plate	B-4851-10	2	B-4901-10	2
6	Tray With Labels	B-6173-BH	1	B-6257-BH	1
7	Tow Bar	B-6259-10	2	B-6259-10	2
9	Plugging Spoon	B-4855-10	24	B-4855-10	32
10	Axle Assembly	B-5700-10	1	B-5702-10	1
11	Lift Handle Assembly	B-5698-10	1	B-5698-10	1
12	End Tube Assembly	B-5309-10	2	B-4862-10	2
13	Center Tube Assembly	B-5311-10	1	B-4865-10	2
14	Handle Grip	B-4867	1	B-4867	1
15	3/4" Nylon Bearing	B-4866	6	B-4866	8
16	Transport Wheel	1009097	2	1009097	2
31	Mount Bracket	B-6171-10	2	B-6258-10	2
33	Center Plate	N/A	N/A	B-4902-10	1

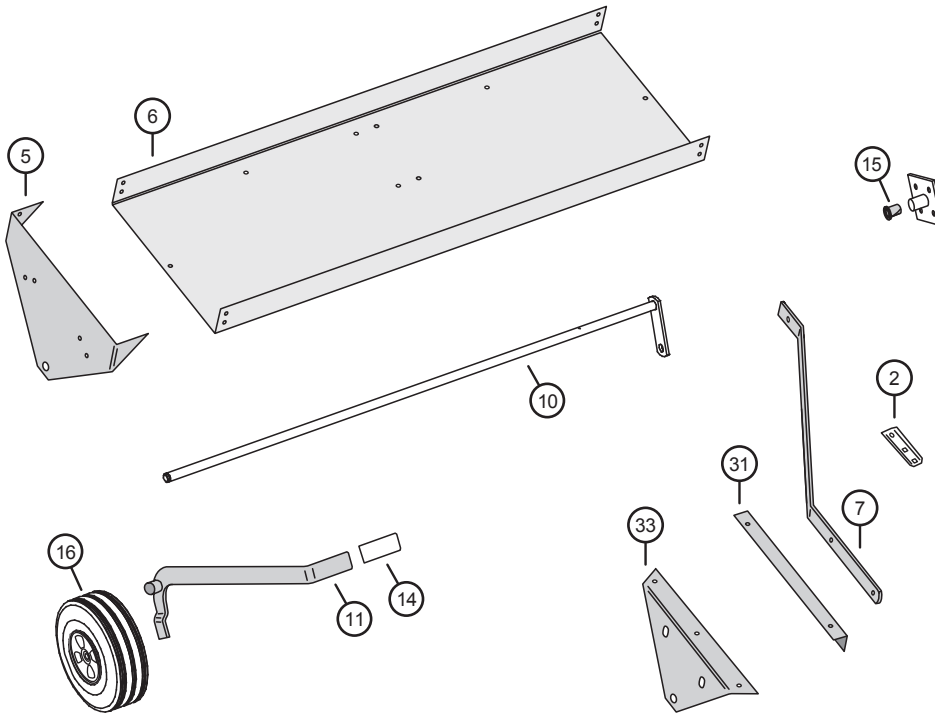

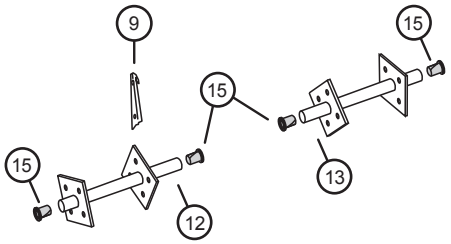

TIP: SPOTTING THE DIFFERENCES BETWEEN TUBES

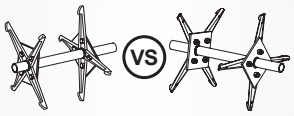

12 *End Tube Assemblies*

THESE HAVE ONE SHORT END

13 *Center Tube Assembly*

THE ENDS ARE IDENTICAL LENGTHS

See pages 26-27 for a complete diagram and index of all parts.

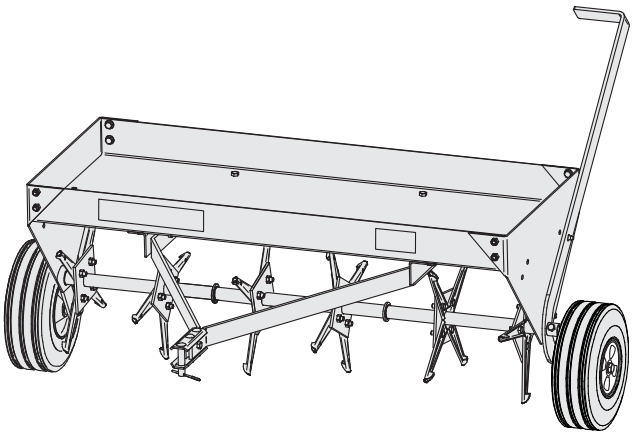

REQUIRED TOOLS FOR ASSEMBLY

- 7/16” Wrench
- 7/16” Socket & Ratchet
- 9/16” Wrench
- 9/16” Socket & Ratchet
- 1/2” Socket & Ratchet
- Pliers
- Gloves

ASSEMBLY: 40” Plug Aerator (PA-40 BH)

If you are assembling the 48” model (PA-48 BH), please skip to page 15 of this manual.
Not sure which model you have? Page 4 will clear up any confusion.

STEP 1

Tear out the Part Identifier (pages 5-6) for a faster assembly process. Organize your hardware and verify that you are, in fact, assembling the PA-40 BH.

See page 27 for a complete index of parts.

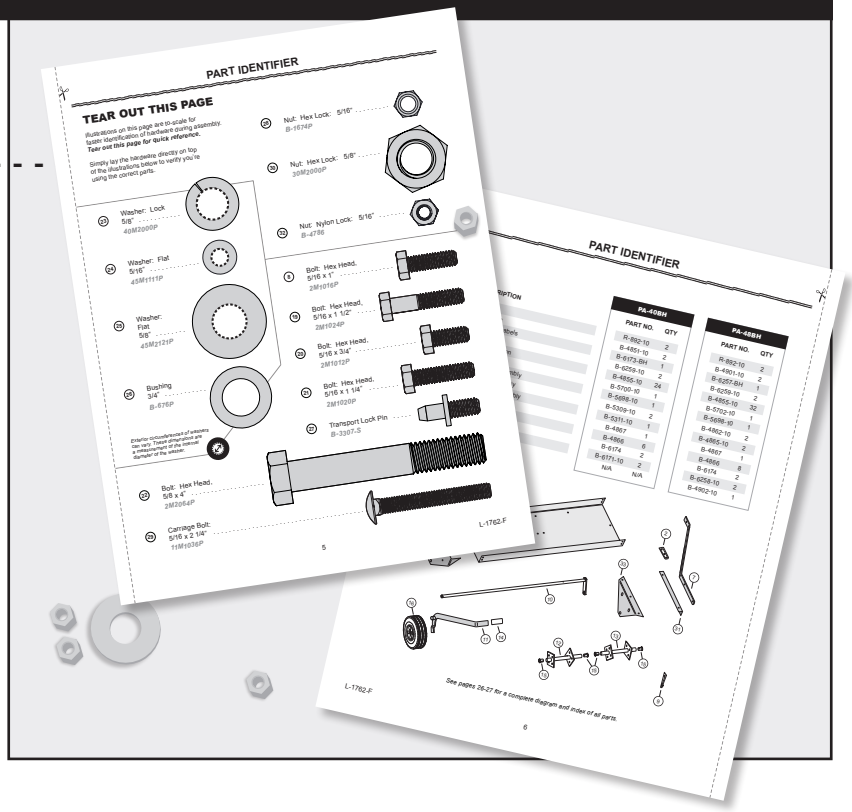

If you have installation questions, are missing parts or need replacement parts, don’t go back to the store! *Please contact our Customer Service department:*

Call, Toll-Free: **877-728-8224**

Chat online: **www.brinly.com**

Email: **customerservice@brinly.com**

Additional info and videos are available on our website:

www.brinly.com

(OR scan this QR code)

STEP 2-A

Align the Side Plates (**5**) with Tray (**6**) as illustrated here.

Find this hardware:

- x8 Hex Bolts (**20**) - 5/16” x 3/4”
- x8 Flat Washers (**24**) - 5/16”
- x8 Nylon Lock Nuts (**32**) - 5/16”

Add a flat washer (**24**) to each of the hex bolts (**20**). From the inside of the tray, insert the bolt and washer assembly.

Secure each bolt with a Nylon Lock Nut (**32**) on the outside edges of the tray and plates.

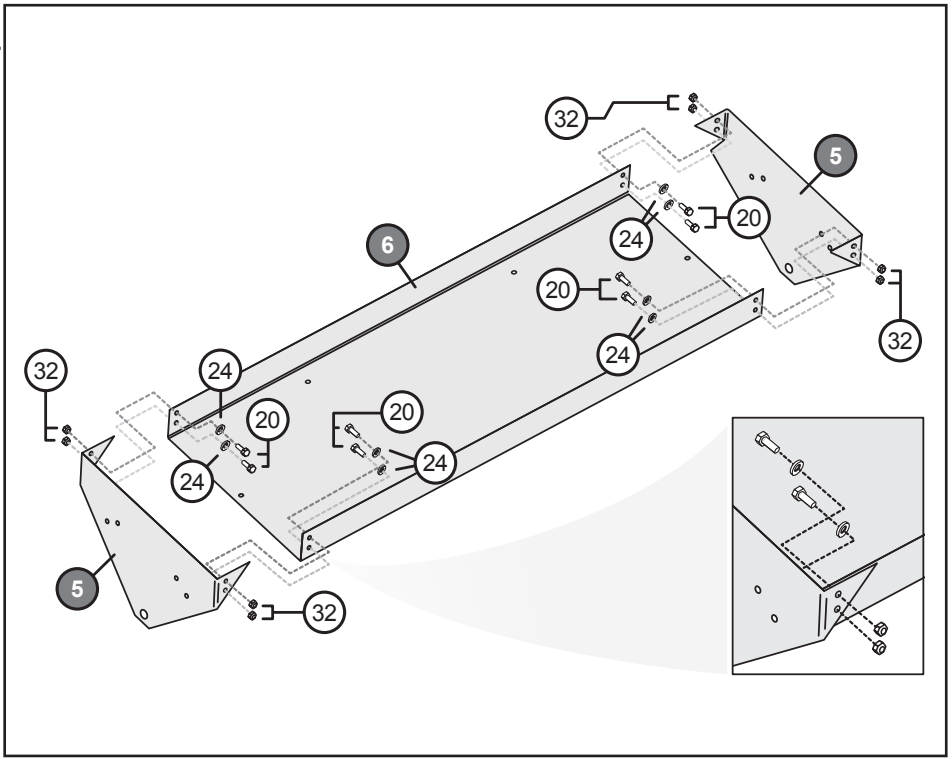

IMPORTANT - When tightening the bolts, maintain a specific distance of inside of the side plates (**5**): 41” to 41-1/8”

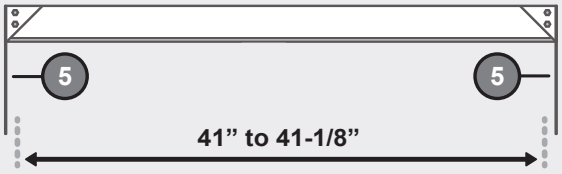

STEP 2-B

Align the Mounting Brackets (**31**) to the outside of Tow Bars (**7**).

Find this hardware:

- x4 Hex Bolts (**8**) - 5/16” x 1”
- x4 Flat Washers (**24**) - 5/16”
- x4 Nylon Lock Nuts (**32**) - 5/16”

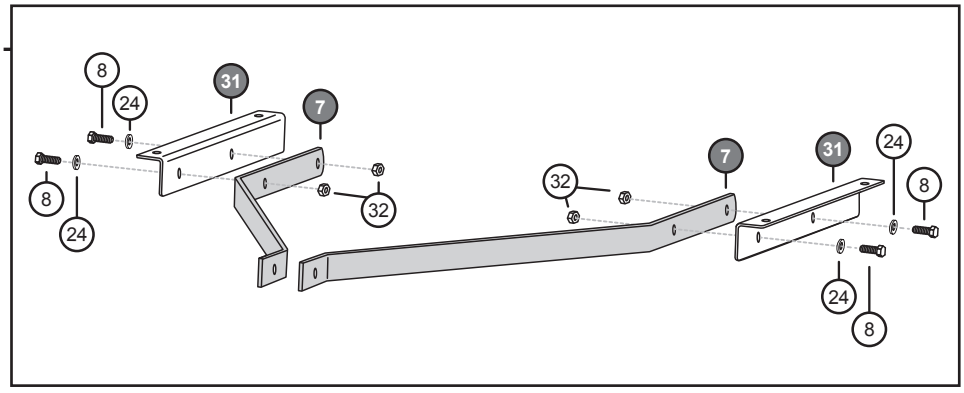

Add a flat washer (**24**) to each of the hex bolts (**8**). Insert the Bolt and Washer Assembly from outside of the Mount Bracket.

Start to add Nylon Lock Nuts (**32**) to the end of each hex bolt, however, **DO NOT** tighten fully (yet).

STEP 3

Assemble Mount Brackets (**31**) to Tray (**6**) as shown.

Find this hardware:

- x4 Hex Bolts (**20**) - 5/16” x 0.75”
- x4 Nylon Lock Nuts (**32**) - 5/16”

Insert the Bolts (**20**) from the topside of the Tray. Add Nylon Lock Nuts (**32**) to the bolts, **DO NOT** tighten fully (yet).

IMPORTANT:
Side of the tray with labels faces forward.

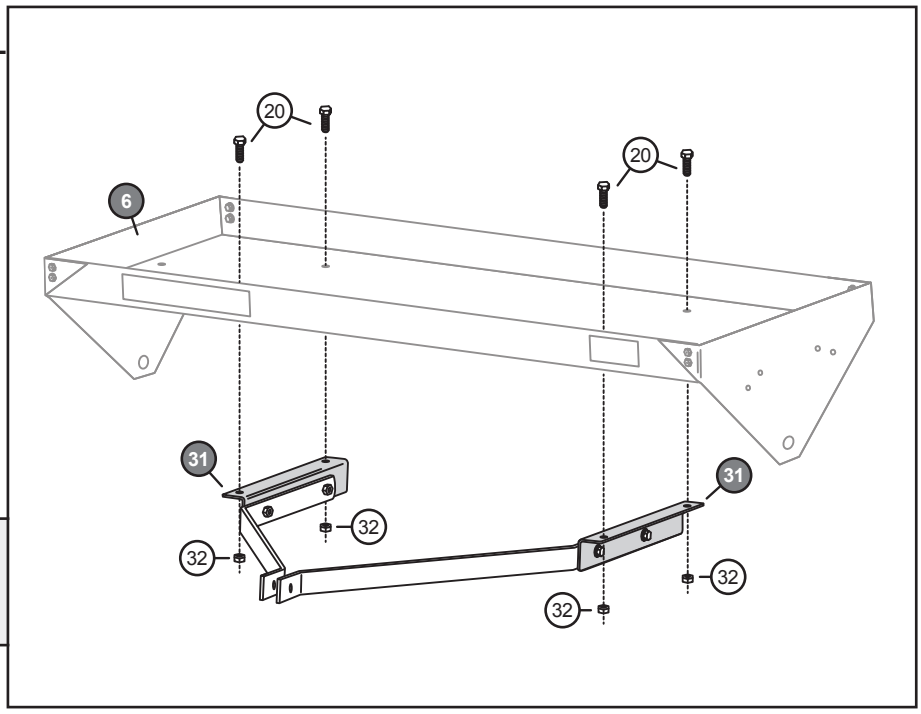

STEP 4

A. Assemble the clevis (**2**) to the tow bars (**7**) as shown.

Hold in place with:

- x2 Carriage Bolts (**29**) - 5/16” x 2.25”
- x2 Nylon Lock Nuts (**32**) - 5/16”

DO NOT tighten fully (yet).

B. Next, secure the tow bars (**7**) in place with:

- x1 Hex Head Bolts (**21**) - 5/16” x 1.25”
- x1 Nylon Lock Nuts (**32**) - 5/16”

DO NOT tighten fully (yet).

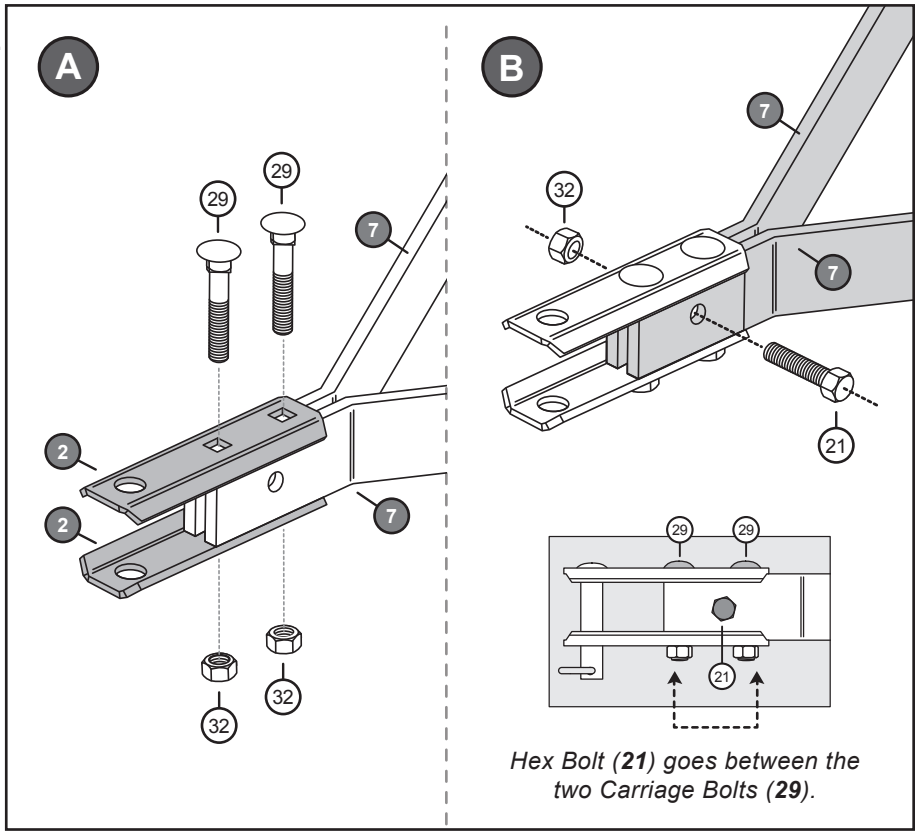

*Hex Bolt (**21**) goes between the two Carriage Bolts (**29**).*

STEP 4

C. Insert Hitch Pin (**17**) in Clevis (**2**) and secure with Hairpin Cotter (**18**). Grasp Hitch Pin and pull forward.

D. **Securely tighten all of the fasteners installed in Steps 4-A and 4-B.** *After that, securely tighten hardware installed from Step 2-B through Step 3.*

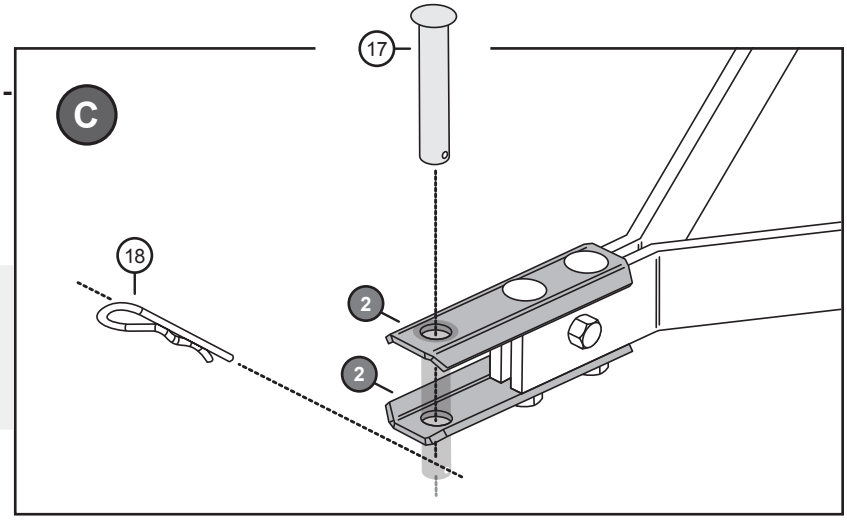

STEP 5

IMPORTANT: *Rounded part of spoon fits against the tube to lock in place.*

Find this hardware:

- x24 Hex Head Bolts (**20**) - 5/16 x 0.75”
- x24 Lock Nuts (**28**) - 5/16”

Align Plugging Spoons (**9**) to each welded plate (side opposite welds) of all the Tube Assemblies (**12** and **13**) as shown.

Run bolts through the Plugging Spoons and secure to each tube assembly (**12** and **13**) with Lock Nuts (**28**) as illustrated here.

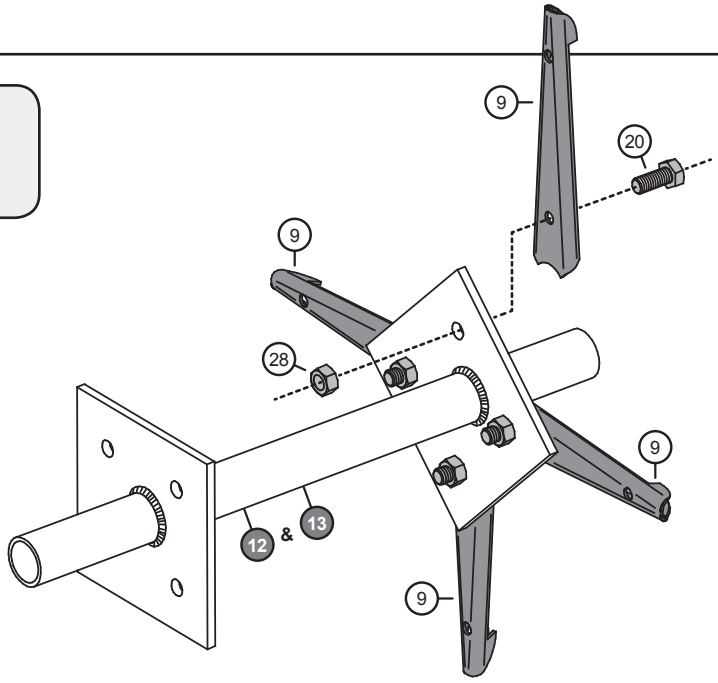

Now insert a Nylon Bearing (**15**) into both ends of all the tube assemblies (**12 & 13**).

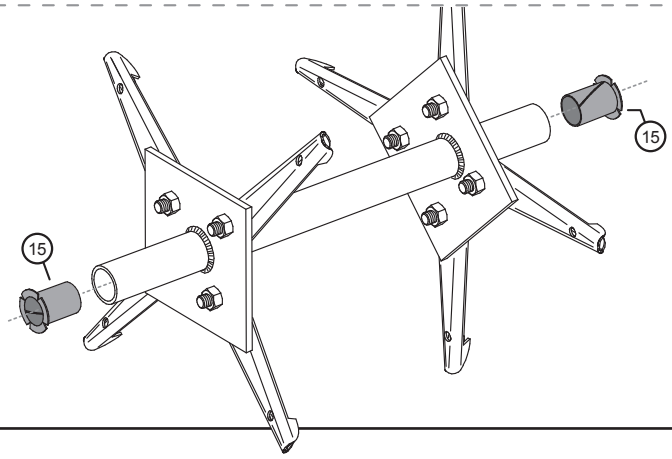

STEP 6

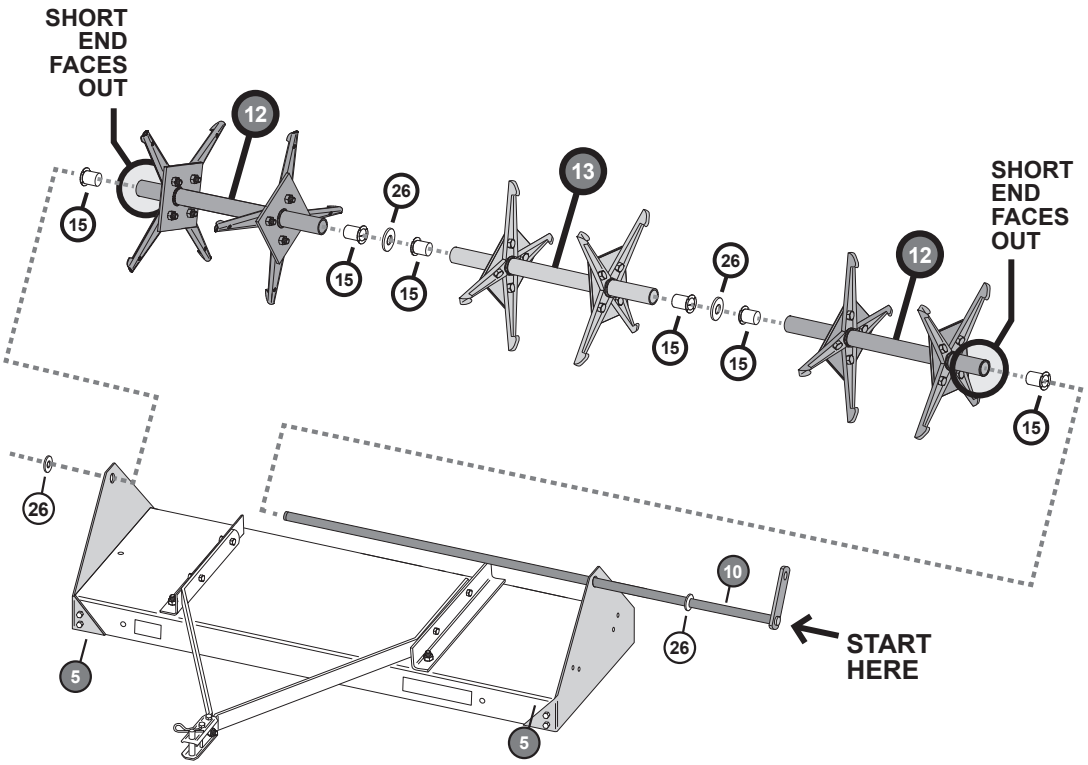

START WITH:

10 + **26** Add a **Machinery Bushing** to the Axle.

5 Insert the Axle Assembly (**10**) through the right side plate as illustrated above.

CONTINUE ADDING TO THE AXLE IN THE FOLLOWING ORDER:

12 **End Tube Assembly** - *Face short end toward the side plate (**5**).*

26 **Machinery Bushing**

13 **Center Tube Assembly**

26 **Machinery Bushing**

12 **End Tube Assembly** - *Face short end toward the side plate (**5**).*

26 **NOTE:** *One (or more) Machinery Bushings (**26**) can be added to the end of the axle, on the outside edge (as needed) to eliminate any side play in the axle assembly.*

TIP: SPOTTING THE DIFFERENCES BETWEEN TUBES

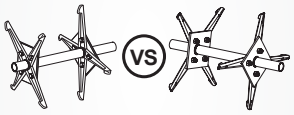

12 *End Tube Assemblies*

THESE HAVE ONE SHORT END

Plate = 1-1/8” from the end of the tube. The short ends need to face out, closest to the side plates (5).

13 *Center Tube Assembly*

THE ENDS ARE IDENTICAL LENGTHS

Plates = 2-3/4” from both ends of the tubes.

STEP 7

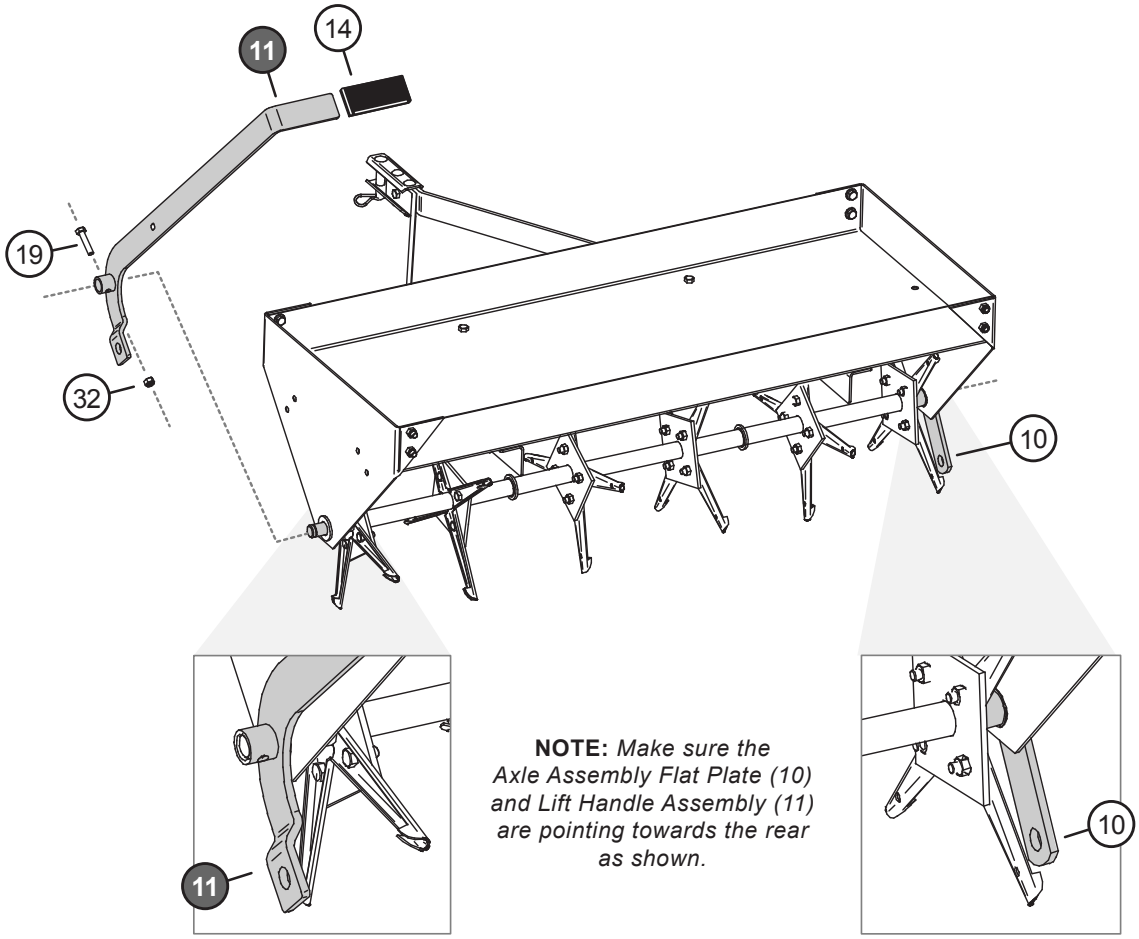

NOTE: *Make sure the Axle Assembly Flat Plate (10) and Lift Handle Assembly (11) are pointing towards the rear as shown.*

FLIP THE AERATOR OVER:

A. Push the Axle Assembly (**10**) through the left side plate as far as possible and rotate so the hole in the flat plate faces to the rear as shown.

Find this hardware:

- x1 Hex Head Bolt (**19**) - 5/16” x 1.5”
- x1 Lock Nuts (**32**) - 5/16”

Install the Lift Handle Assembly (**11**) with the welded tube facing out, to the Axle Assembly (**10**). Secure with Hex Bolt (**19**) and Nylon Lock Nut (**32**).

B. Slip Handle Grip (**14**) over end of Lift Handle Assembly (**11**).

NOTE: Soapy water will help while adding the handle grip (14).

STEP 8

Combine:

- x1 Hex Bolt (**22**) - 5/16” x 4”
- x1 Flat Washer (**25**) - 5/8”

Slide the bolt assembly through one wheel (**16**) (wheel hub pointing toward the threads of the bolt) and add:

- x1 Flat Washer (**25**) - 5/8”
- x1 Hex Nut (**30**) - 5/8”

Thread the hex nut as far as possible, still allowing wheel to rotate freely.

Continue by running the hex bolt through holes in Lift Handle (**11**) *(and Axle Assembly (**10**) on the other end of the Aerator).*

Secure with:

- x1 Lock Washer (**23**)
- x1 Hex Nut (**30**)

Tighten the inside Hex Nut while holding the Hex Nut next to wheel stationary.

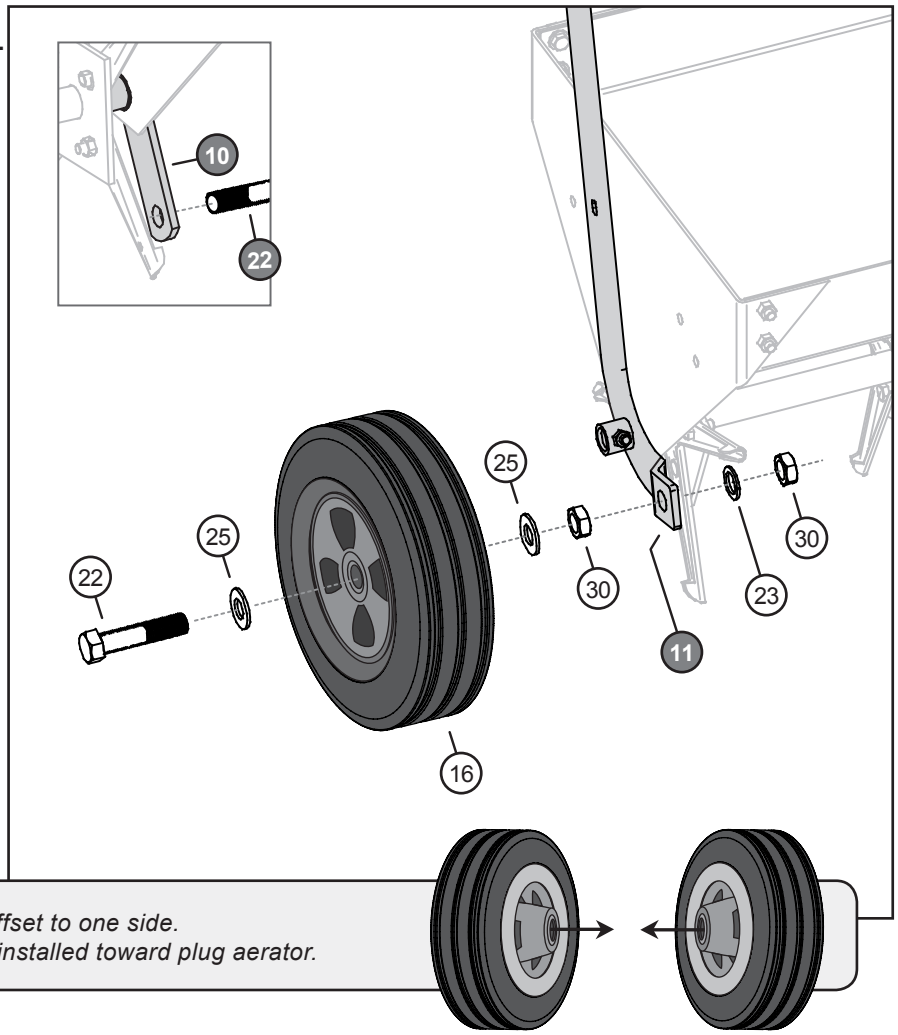

IMPORTANT: *The wheel hubs are offset to one side. Make sure the extended offsets are installed toward plug aerator.*

STEP 9

Insert Transport Pin (**27**) in rear hole same side as the Lift Handle Assembly (**11**) as shown. Secure with Nylon Lock Nut (**32**).

NOTE - Moving the wheels in and out of transport mode:

Lift handle assembly (11) will pivot and raise / lower the wheels. This transport pin (27) allows the handle to be locked in place during transport.

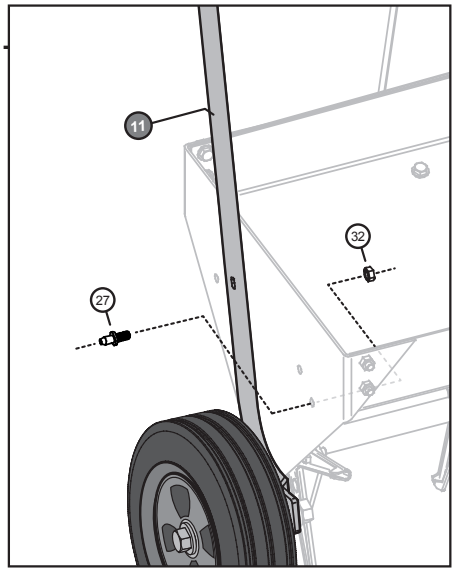

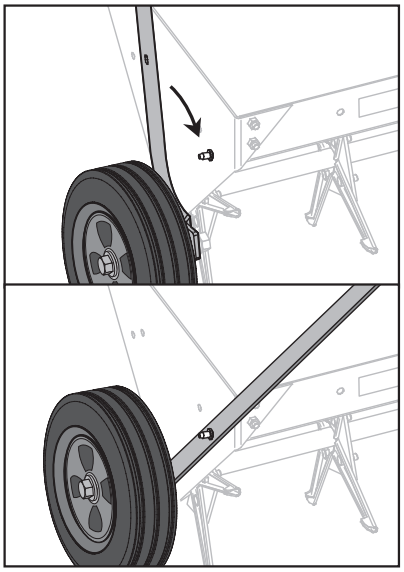

STEP 10

LEVELING

The final step is to level Tray (**6**) using adjustment bolts as shown here and installed in Step 2-B.

To adjust, loosen Bolts and position Tow Bars (**7**) until level.

NOTE:
The adjustment is made with the aerator attached to the rider or lawn/garden tractor with the wheels in transport position.

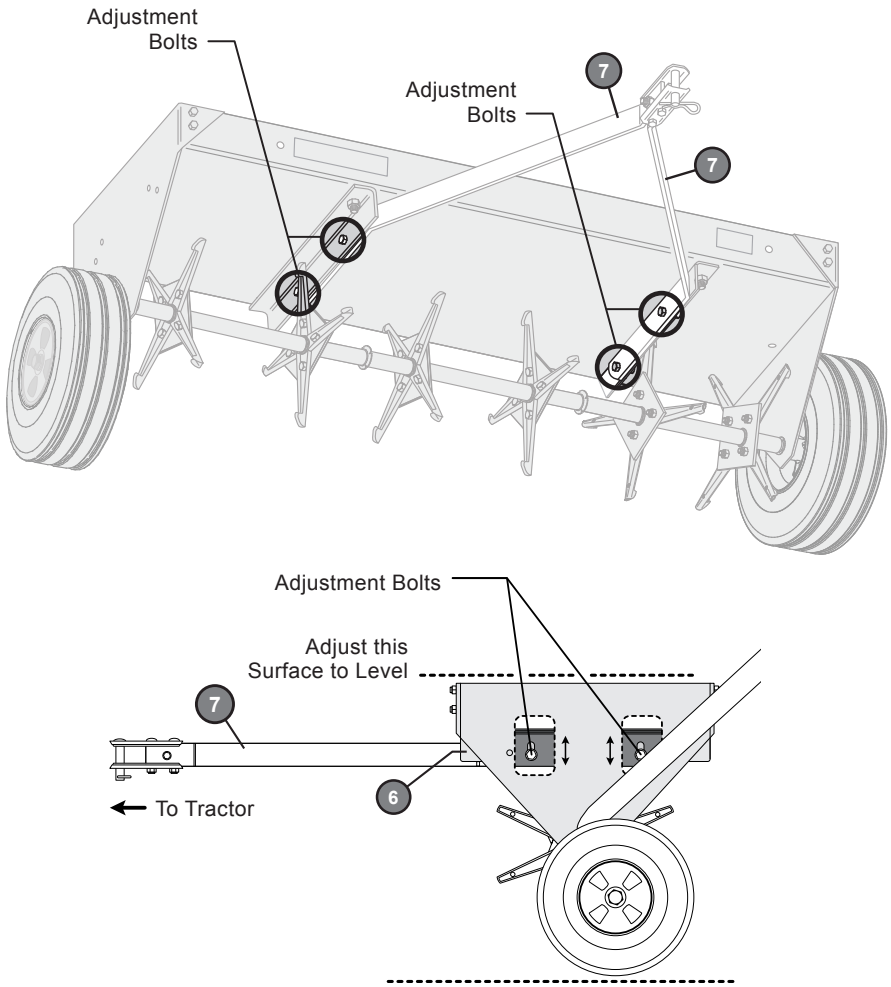

ASSEMBLY IS COMPLETE!

To find replacement parts, an index / breakdown of all the parts for this model can be found on pages 26-27.

Operation, Maintenance and Service information available on pages 23-25

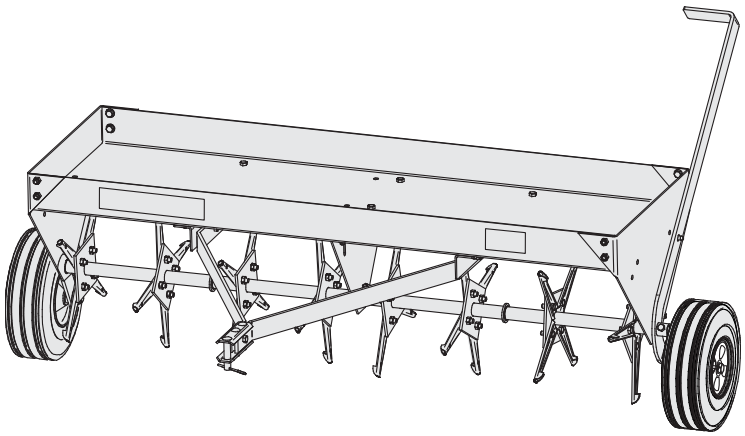

REQUIRED TOOLS FOR ASSEMBLY

- 7/16” Wrench
- 7/16” Socket & Ratchet
- 9/16” Wrench
- 9/16” Socket & Ratchet
- 1/2” Socket & Ratchet
- Pliers
- Gloves

ASSEMBLY: 48” Plug Aerator (PA-48 BH)

If you are assembling the 40” model (PA-40 BH), please go back to page 7 of this manual.
Not sure which model you have? Page 4 will clear up any confusion.

STEP 1

Tear out the Part Identifier (pages 5-6) for a faster assembly process. Organize your hardware and verify that you are, in fact, assembling the PA-48 BH.

See page 27 for a complete index of parts.

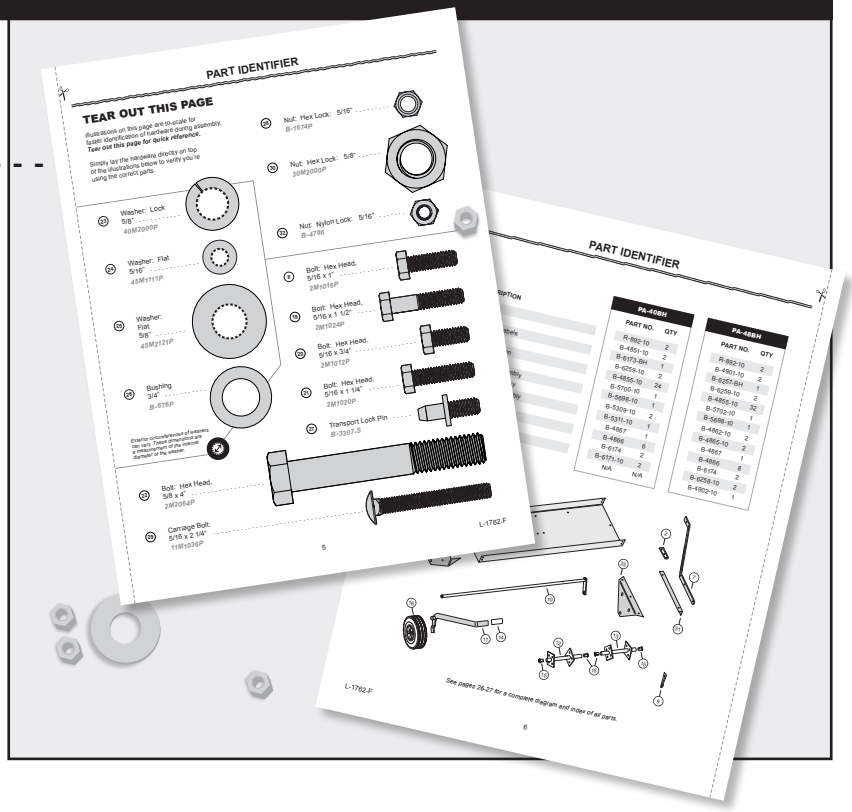

If you have installation questions, are missing parts or need replacement parts, don’t go back to the store! *Please contact our Customer Service department:*

Call, Toll-Free: **877-728-8224**

Chat online: **www.brinly.com**

Email: **customerservice@brinly.com**

Additional info and videos are available on our website:

www.brinly.com

(OR scan this QR code)

STEP 2-A

Align the Side Plates (**5**) with Tray (**6**) as illustrated here.

Find this hardware:

- x8 Hex Bolts (**20**) - 5/16” x 3/4”
- x8 Flat Washers (**24**) - 5/16”
- x8 Nylon Lock Nuts (**32**) - 5/16”

Add a flat washer (**24**) to each of the hex bolts (**20**). From the inside of the tray, insert the bolt and washer assembly.

Secure each bolt with a Nylon Lock Nut (**32**) on the outside edges of the tray and plates.

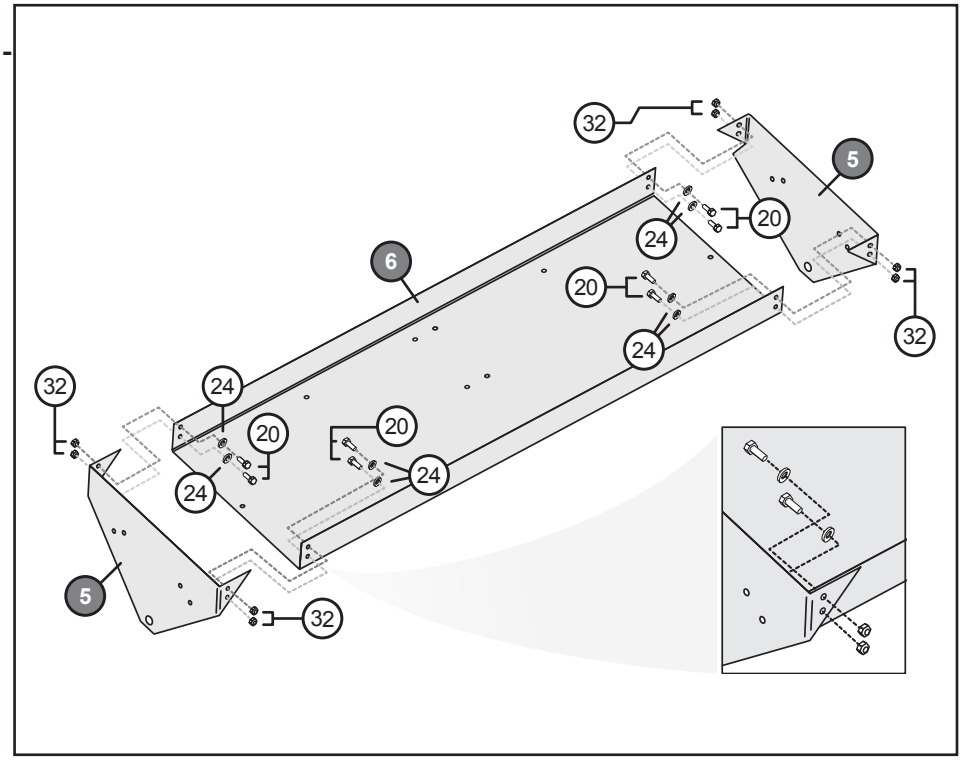

IMPORTANT - When tightening the bolts, maintain a specific distance of inside of the side plates (**5**): 48” to 48-1/8”

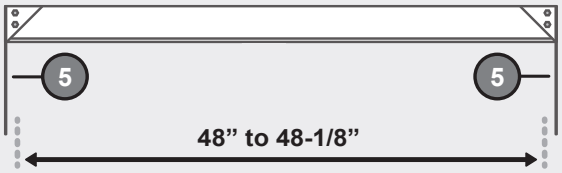

STEP 2-B

Align the Mounting Brackets (**31**) to the outside of Tow Bars (**7**).

Find this hardware:

- x4 Hex Bolts (**8**) - 5/16” x 1”
- x4 Flat Washers (**24**) - 5/16”
- x4 Nylon Lock Nuts (**32**) - 5/16”

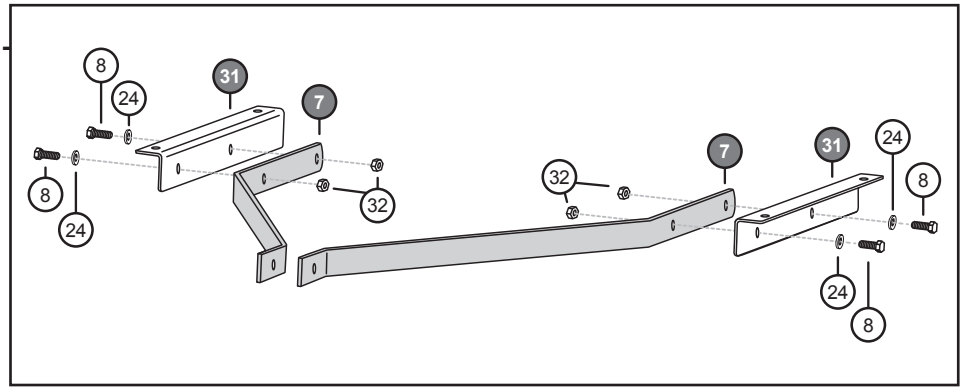

Add a flat washer (**24**) to each of the hex bolts (**8**). Insert the Bolt and Washer Assembly from outside of the Mount Bracket.

Start to add Nylon Lock Nuts (**32**) to the end of each hex bolt, however, **DO NOT** tighten fully (yet).

STEP 3

Assemble Mount Brackets (**31**) to Tray (**6**) as shown.

Find this hardware:

- x7 Hex Bolts (**20**) - 5/16” x 0.75”
- x7 Nylon Lock Nuts (**32**) - 5/16”

Align the Center Plate (**33**) with Tray (**6**) as shown. Insert three Hex Bolts (**20**) through the top of the Tray. Loosely hold in place with three Lock Nuts (**32**).

Insert the Bolts (**20**) from the topside of the Tray. **DO NOT** tighten fully (yet), but secure with four Nylon Lock Nuts (**32**).

IMPORTANT:
Side of the tray with labels faces forward.

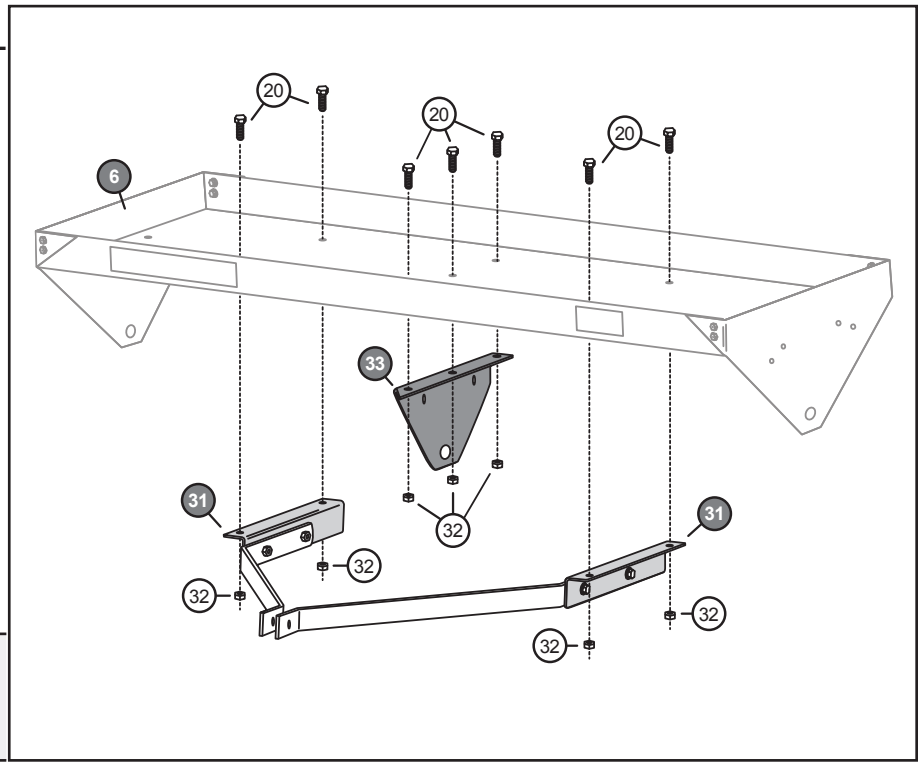

STEP 4

A. Assemble the clevis (**2**) to the tow bars (**7**) as shown.

Hold in place with:

- x2 Carriage Bolts (**29**) - 5/16” x 2.25”
- x2 Nylon Lock Nuts (**32**) - 5/16”

DO NOT tighten fully (yet).

B. Next, secure the tow bars (**7**) in place with:

- x1 Hex Head Bolts (**21**) - 5/16” x 1.25”
- x1 Nylon Lock Nuts (**32**) - 5/16”

DO NOT tighten fully (yet).

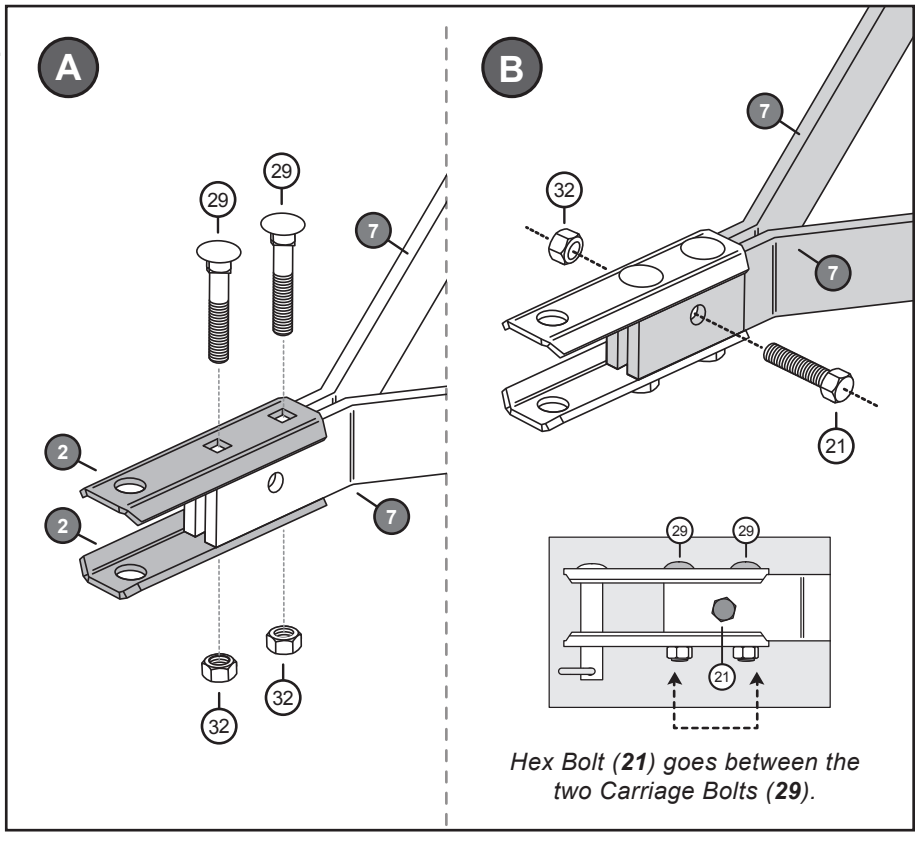

*Hex Bolt (**21**) goes between the two Carriage Bolts (**29**).*

STEP 4

C. Insert Hitch Pin (**17**) in Clevis (**2**) and secure with Hairpin Cotter (**18**). Grasp Hitch Pin and pull forward.

D. **Securely tighten all fasteners installed in Steps 4-A and 4-B.** *After that, securely tighten all the hardware installed from Step 2-B through Step 3.*

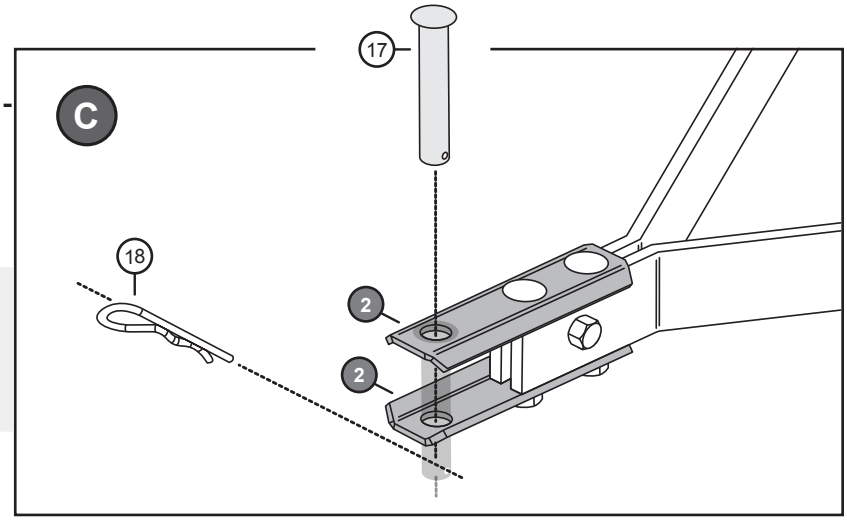

STEP 5

IMPORTANT: *Rounded part of spoon fits against the tube to lock in place.*

Find this hardware:

- x32 Hex Head Bolts (**20**) - 5/16 x 0.75”
- x32 Flat Washers (**24**) - 5/16”
- x32 Lock Nuts (**28**) - 5/16”

Align Plugging Spoons (**9**) to each welded plate (side opposite welds) of all the Tube Assemblies (**12** and **13**) as shown.

Run bolts through the Plugging Spoons and secure to each tube assembly (**12** and **13**) with Lock Nuts (**28**) as illustrated here.

Now insert a Nylon Bearing (**15**) into both ends of all the tube assemblies (**12 & 13**).

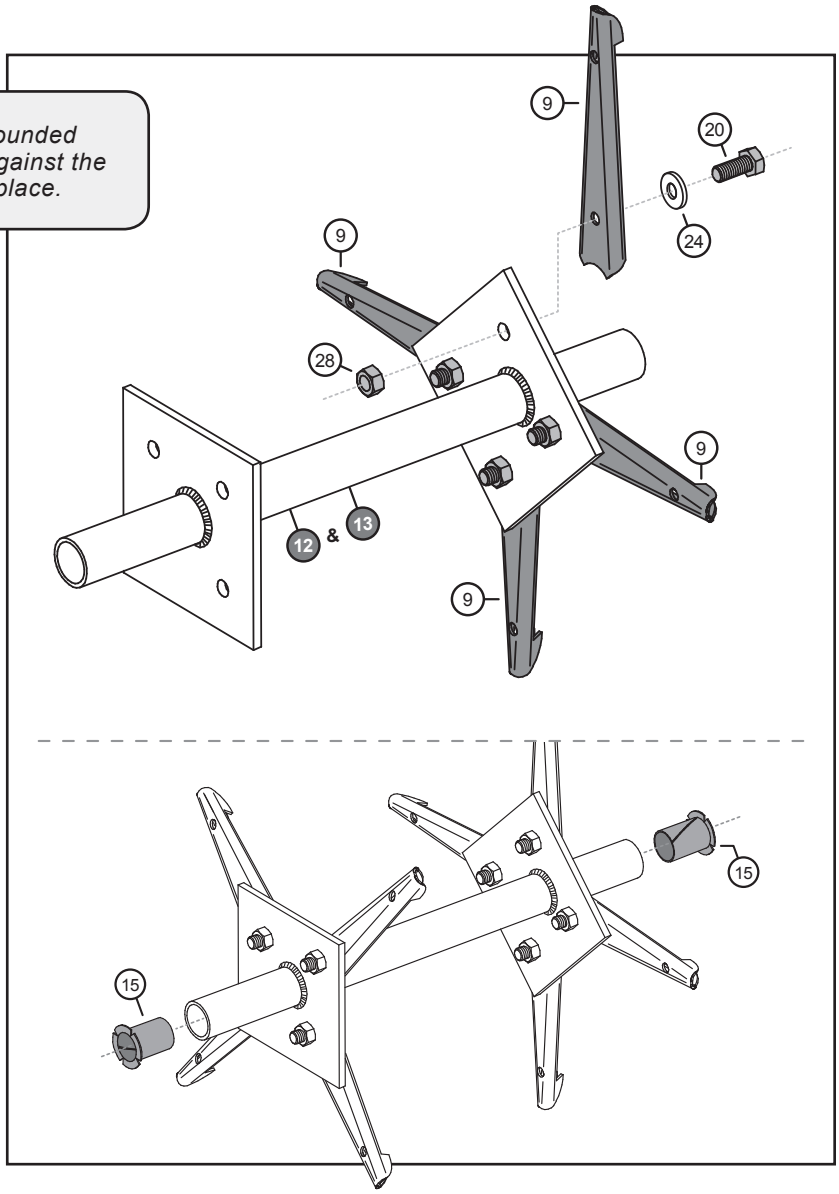

STEP 6

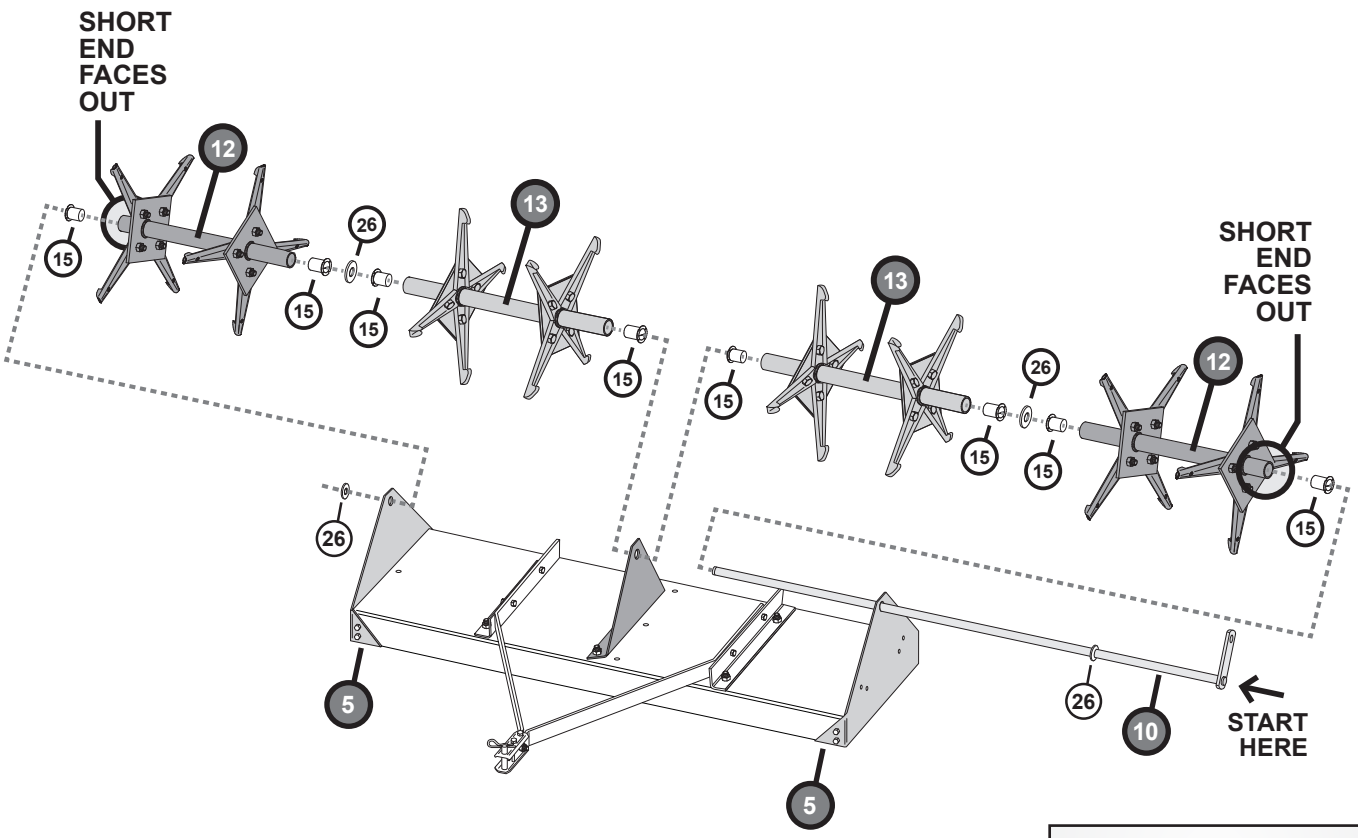

START WITH:

10 + **26** Add a **Machinery Bushing** to the Axle.

5 Insert the Axle Assembly (**10**) through the right side plate as illustrated above.

CONTINUE ADDING TO THE AXLE IN THE FOLLOWING ORDER:

12 **End Tube Assembly** - *Face short end toward the side plate (**5**).*

26 **Machinery Bushing**

13 **Center Tube Assembly**

Slide axle through the Center Plate **33**

13 **Center Tube Assembly**

26 **Machinery Bushing**

12 **End Tube Assembly** - *Face short end toward the side plate (**5**).*

26 **NOTE:** *One (or more) Machinery Bushings (**26**) can be added to the end of the axle, on the outside edge (as needed) to eliminate any side play in the axle assembly.*

TIP: SPOTTING THE DIFFERENCES BETWEEN TUBES

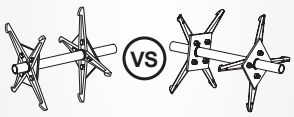

12 *End Tube Assemblies*

THESE HAVE ONE SHORT END

Plate = 1-1/8” from the end of the tube. The short ends need to face out, closest to the side plates (5).

13 *Center Tube Assemblies*

THE ENDS ARE IDENTICAL LENGTHS

Plates = 2-3/4” from both ends of the tubes.

STEP 7

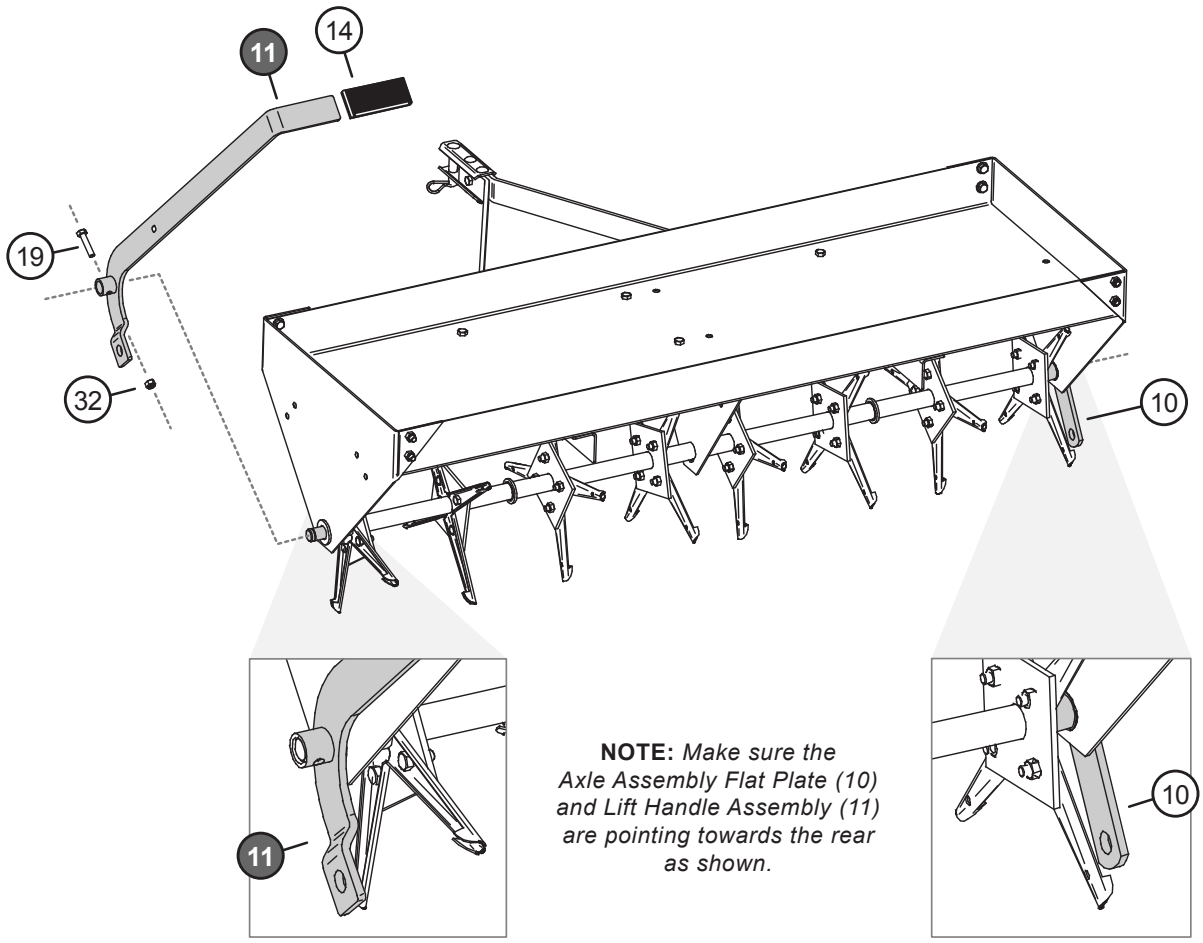

NOTE: *Make sure the Axle Assembly Flat Plate (10) and Lift Handle Assembly (11) are pointing towards the rear as shown.*

FLIP THE AERATOR OVER:

A. Push the Axle Assembly (**10**) through the left side plate as far as possible and rotate so the hole in the flat plate faces to the rear as shown.

Find this hardware:

- x24 Hex Head Bolt (**19**) - 5/16” x 1.5”
- x24 Lock Nuts (**32**) - 5/16”

Install the Lift Handle Assembly (**11**) with the welded tube facing out, to the Axle Assembly (**10**). Secure with Hex Bolt (**19**) and Nylon Lock Nut (**32**).

B. Slip Handle Grip (**14**) over end of Lift Handle Assembly (**11**).

NOTE: Soapy water will help while adding the handle grip (14).

STEP 8

Combine:

- x1 Hex Bolt (**22**) - 5/16” x 4”
- x1 Flat Washer (**25**) - 5/8”

Slide the bolt assembly through one wheel (**16**) (wheel hub pointing toward the threads of the bolt) and add:

- x1 Flat Washer (**25**) - 5/8”
- x1 Hex Nut (**30**) - 5/8”

Thread the hex nut as far as possible, still allowing wheel to rotate freely.

Continue by running the hex bolt through holes in Lift Handle (**11**) *(and Axle Assembly (**10**) on the other end of the Aerator).*

Secure with:

- x1 Lock Washer (**23**)
- x1 Hex Nut (**30**)

Tighten the inside Hex Nut while holding the Hex Nut next to wheel stationary.

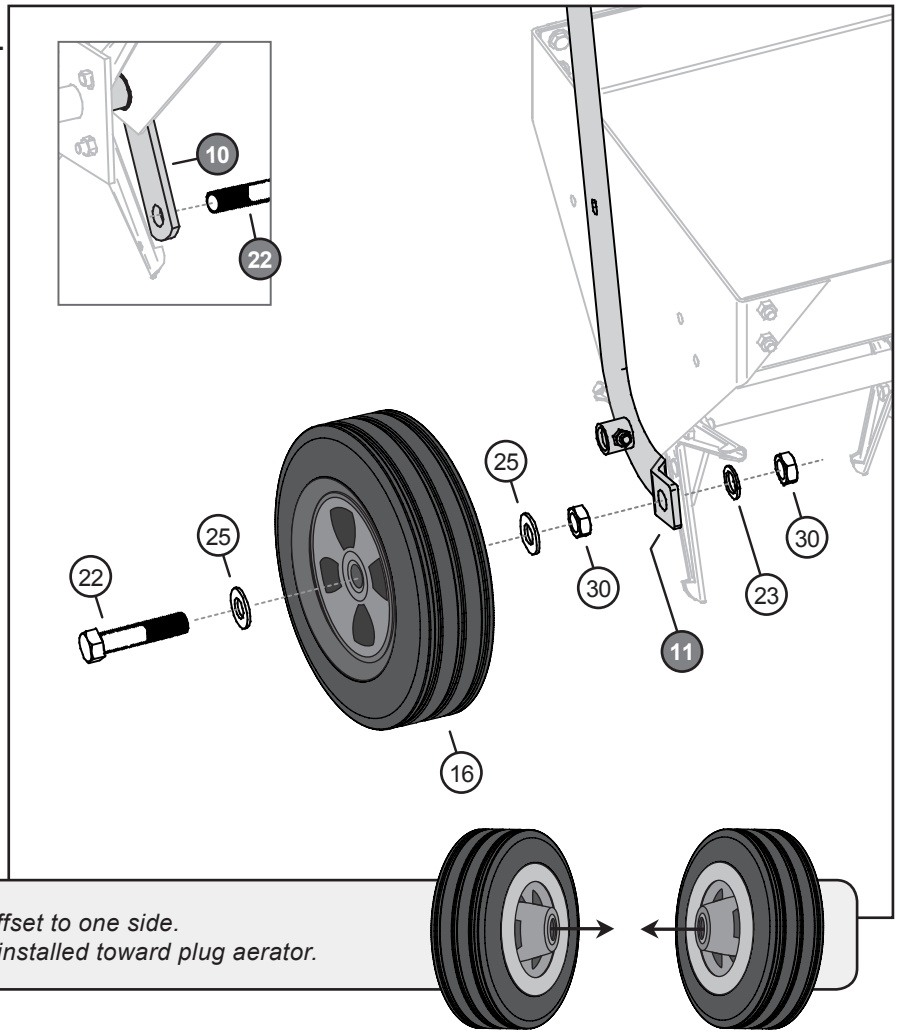

IMPORTANT: *The wheel hubs are offset to one side. Make sure the extended offsets are installed toward plug aerator.*

STEP 9

Insert Transport Pin (**27**) in rear hole same side as the Lift Handle Assembly (**11**) as shown. Secure with Nylon Lock Nut (**32**).

NOTE - Moving the wheels in and out of transport mode:

Lift handle assembly (11) will pivot and raise / lower the wheels. This transport pin (27) allows the handle to be locked in place during transport.

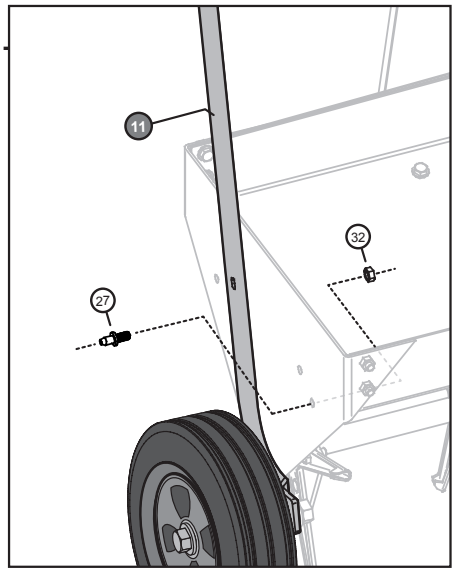

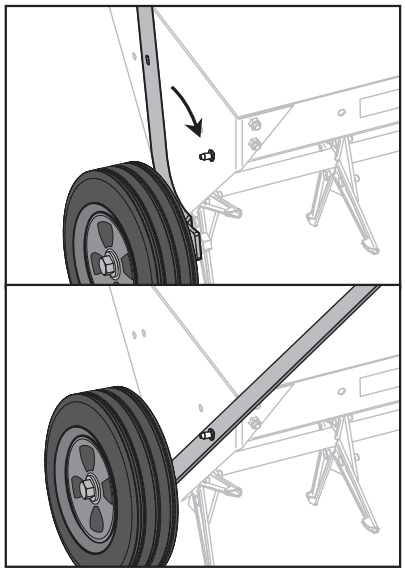

STEP 10

LEVELING

The final step is to level Tray (**6**) using adjustment bolts as shown here and installed in Step 2.

To adjust, loosen Bolts and position Tow Bars (**7**) until level.

NOTE:
The adjustment is made with the aerator attached to the rider or lawn/garden tractor with the wheels in transport position.

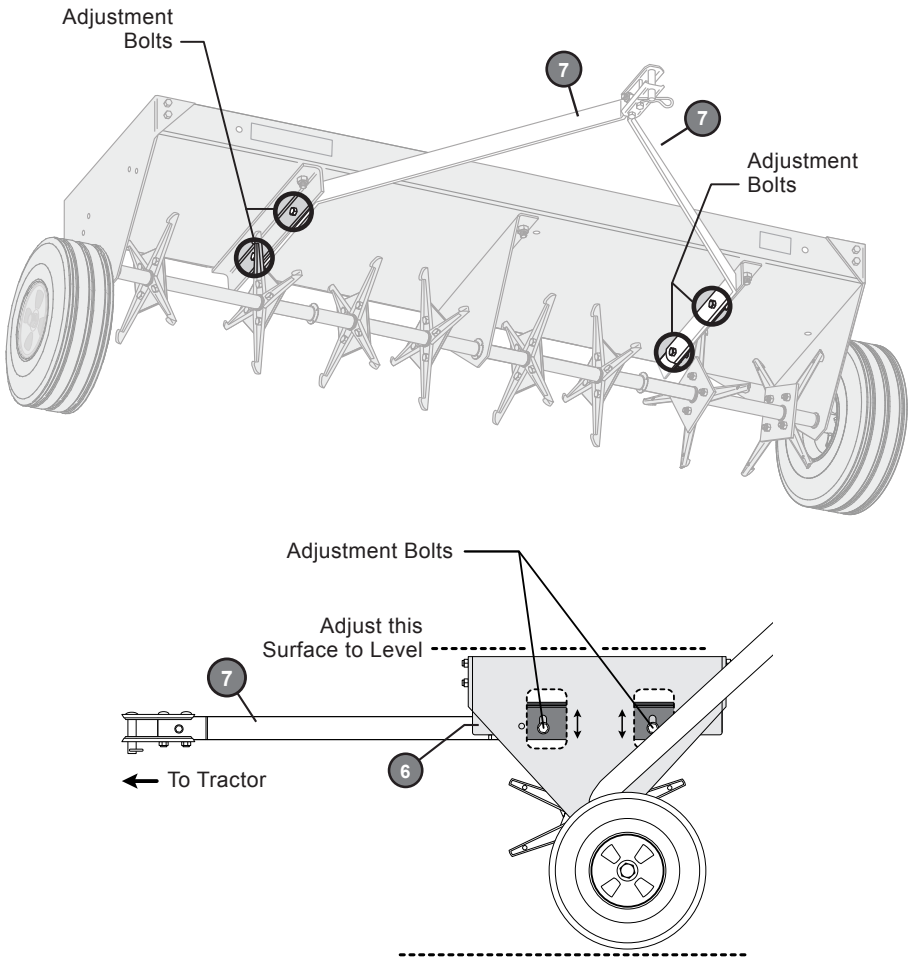

ASSEMBLY IS COMPLETE!

To find replacement parts, an index / breakdown of all the parts for this model can be found on pages 26-27.

Operation, Maintenance and Service information available on pages 23-25

OPERATION

WHEN TO AERATE

Your Aerator should NOT be used when lawn conditions are too wet or too dry.

TO DETERMINE LAWN CONDITION:

Dig a small amount of your soil *(about three inches deep)*.
Roll it into a small ball in the palm of your hand.

Soil appears powdery & brittle

⚠ Your soil is **TOO DRY**

Wait until a later date because the tines will not penetrate properly.

Soil is not powdery & brittle but still falls apart

👍 Your soil is in **IDEAL CONDITION** to begin aerating!

Soil forms a ball

⚠ Your soil is **TOO WET**

Wait until the soil has dried. The tines will not operate effectively & your tractor could loose traction, causing lawn damage.

INFO & VIDEOS

Additional info and videos are available on our website:

www.brinly.com

(OR scan the QR codes below)

PA-40BH *Info & Videos*

PA-48BH *Info & Videos*

USE OF ADDITIONAL WEIGHT

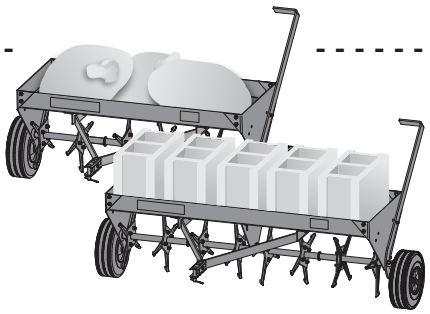

The weight required to give a recommended penetration of approximately two to three inches will vary according to soil type and conditions. Concrete blocks, patio blocks, sand bags, or any other type of weight can be added to Aerator Tray as required. Weight can be secured by using tie downs through holes in Tray Flanges. Tie downs are not furnished with your unit. Usually three Concrete Blocks will be sufficient, but more or less weight may be required.

Weight Capacity:	**PA-40 BH** 150 lbs.
	PA-48 BH 200 lbs.

- Drive your tractor to location to be Aerated.
- Lower Aerator to Operating Position.
- Drive the Tractor FORWARD approximately ten feet & stop.
- Observe the operation- there should be a Plug hole approximately every ten to twelve inches and not more than three inches deep.
- Add or remove weight to obtain this condition.

OPERATION

MOUNTING AND TRANSPORTING

Attach aerator to your rider or lawn/garden tractor using pin and hairpin cotter (supplied).

TO PLACE IN TRANSPORT POSITION:

- Push REARWARD on Lift Handle (**11**) towards Transport Lock Pin in Side Plate.

  Pull Handle OUT and move over the Lock Pin. Aerator now rests on wheels.

TO PLACE IN OPERATING POSITION:

- Pull OUT on Lift Handle (releasing from Transport Lock Pin) and move FORWARD.

  Aerator now rests on Plugging Spoons.

CAUTION:

- After first thirty minutes of use check all fasteners for tightness.
- To avoid damage to spoons, always engage transport wheels to raise the spoons when crossing concrete or asphalt walks, drives, or roads.
- Use the Aerator only on an established lawn, never on newly laid sod.
- To avoid possible personal injury and/ or equipment never exceed the recommended operating speed range of 3 to 5 MPH.
- Only tow Aerator behind vehicles for which it was designed, riders and lawn/garden tractors.
- Do not stand/ride on Aerator, bodily injury could result.
- Always disconnect Aerator from tractor when cleaning or servicing unit.
- Never exceed the Weight Tray capacity.
- Do Not attempt to disconnect Aerator from tractor with weight in Tray.
- When backing, carefully back straight to avoid Jack-knifing, which could result in damage to equipment.

MAINTENANCE

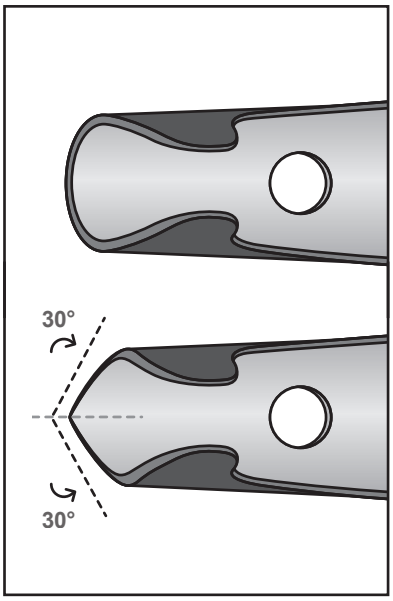

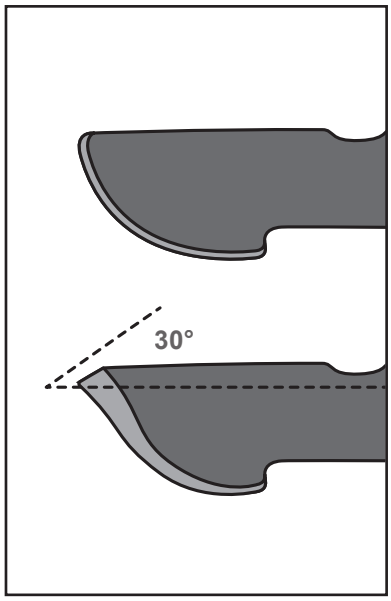

SHARPENING GUIDE

Sharping the spoons may provide improved performance.

1. Using a metal file or grinding wheel, sharpen the outer edge of the end at a 30° angle for each spoon.

2. After sharpening all the spoons, spray paint the exposed metal to prevent rust.

   NOTE: *Use a rust-preventive spray paint on the exposed metal after sharping all of the spoons.*

3. Allow the paint to fully dry based on the paint's recommended drying time.

MAINTENANCE

- The key to years of trouble-free service is to keep your Aerator clean and dry.
- Never allow wet material to remain in tray for extended periods of time.
- Occasionally check all moving parts for free movement and, if necessary, lubricate with oil.
- Should rust develop, sand lightly & then paint area with enamel.
- Periodically check all fasteners for tightness.

BEFORE EVERY USE:

APPLY A DROP OF LUBRICATING OIL TO EACH NYLON BEARING AND THE AERATOR AXLE

IMPORTANT:

To prevent rust on plugging spoons, apply a light coat of oil on the working areas of spoons after each use. Should rust appear on any other part of your Aerator, sand lightly to remove rust and coat lightly with enamel.

Plugging spoons are manufactured with special steels and are heat treated to resist wear of abrasive soil. Striking sub-surface objects can cause spoon breakage. Contact our Customer Service Department at 1-877-728-8224 to purchase replacement Plugging Spoons (Part# B-4855-10).

Periodically check the spoons remove any debris which might build up and restrict their action.

After each use, service unit as described and store in a dry area, shielding tines to avoid injury.

SERVICE

QUALITY CONTINUES WITH QUALITY SERVICE

We provide a process to remedy your questions or problems. Follow the steps below to get answers to any questions you may have about your product, or to order replacement parts:

1. Refer to your attachment and machine operator manuals.
2. In North America and Canada, call 1-877-728-8224 and provide product serial number and model number.

PARTS REFERENCE

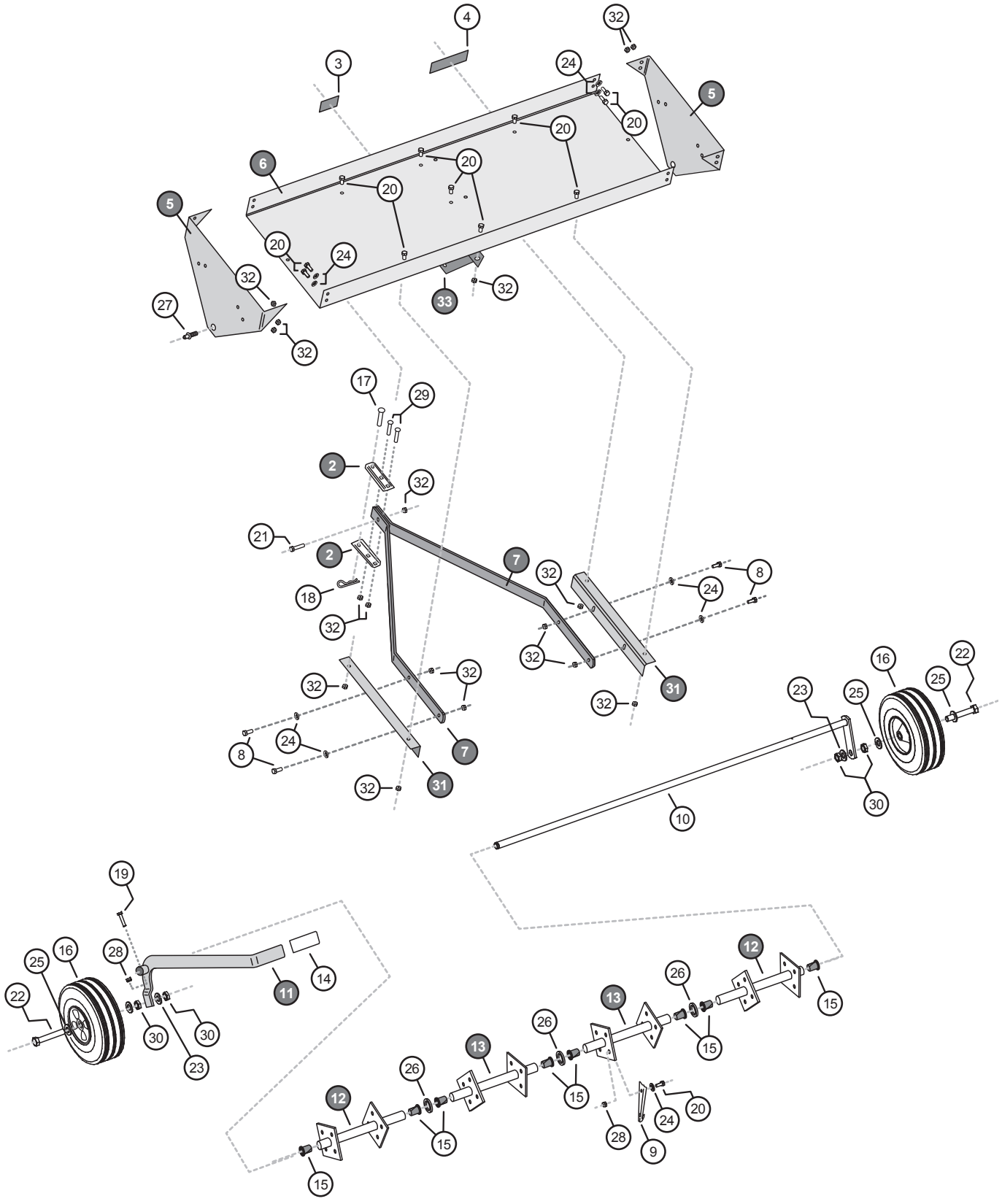

PARTS LIST

REF	DESCRIPTION	PA-40BH		PA-48BH	
		PART NO.	QTY	PART NO.	QTY
1	Instructions *	L-1762	1	L-1762	1
2	Clevis	R-892-10	2	R-892-10	2
3	Caution Label	R-1946	1	R-1946	1
4	Logo Decal	B-5922	1	B-5925	1
5	Side Plate	B-4851-10	2	B-4901-10	2
6	Tray With Labels	B-6173-BH	1	B-6257-BH	1
7	Tow Bar	B-6259-10	2	B-6259-10	2
8	Hex Bolt, 5/16" x 1"	2M1016P	4	2M1016P	4
9	Plugging Spoon	B-4855-10	24	B-4855-10	32
10	Axle Assembly	B-5700-10	1	B-5702-10	1
11	Lift Handle Assembly	B-5698-10	1	B-5698-10	1
12	End Tube Assembly	B-5309-10	2	B-4862-10	2
13	Center Tube Assembly	B-5311-10	1	B-4865-10	2
14	Handle Grip	B-4867	1	B-4867	1
15	3/4" Nylon Bearing	B-4866	6	B-4866	8
16	Transport Wheel	1009097	2	1009097	2
17	Hitch Pin	B-3861	1	B-3861	1
18	Hair Pin Cotter	D-146P	1	D-146P	1
19	Hex Bolt, 5/16" x 1-1/2"	2M1024P	1	2M1024P	1
20	Hex Bolt, 5/16" x 3/4"	2M1012P	37	2M1012P	48
21	Hex Bolt, 5/16" x 1-1/4"	2M1020P	1	2M1020P	1
22	Hex Bolt, 5/8" x 4"	2M2064P	2	2M2064P	2
23	Lock Washer, 5/8"	40M2000P	2	40M2000P	2
24	Flat Washer, 5/16"	45M1111P	12	45M1111P	45
25	Flat Washer, 5/8"	45M2121P	4	45M2121P	4
26	Bushing, 3/4"	B-676P	6	B-676P	6
27	Transport Lock Pin	B-3307-S	1	B-3307-S	1
28	Hex Lock Nut, 5/16"	B-1674P	25	B-1674P	33
29	Carriage Bolt, 5/16" x 2-1/4"	11M1036P	2	11M1036P	2
30	Hex Nut, 5/8"	30M2000P	4	30M2000P	4
31	Mount Bracket	B-6171-10	2	B-6258-10	2
32	Nylon Lock Nut, 5/16"	B-4786	21	B-4786	24
33	Center Plate	N/A	N/A	B-4902-10	1

**Not Shown*

INSTALLATION QUESTIONS? MISSING PARTS? NEED REPLACEMENT PARTS?

DON'T GO BACK TO THE STORE!

Please call Customer Service Department Toll Free 877-728-8224 **OR** Email: customerservice@brinly.com

SINCE 1839
BRINLY

MANUFACTURER'S LIMITED WARRANTY FOR BRINLY PULL-BEHIND ACCESSORIES

The limited warranty set forth below is given by Brinly-Hardy Company with respect to new merchandise purchased and used in the United States, its possessions and territories.

Brinly-Hardy Company warrants the products listed below against defects in material and workmanship, and will at its option, repair or replace, free of charge, any part found to be defective in materials or workmanship. This limited warranty shall only apply if this product has been assembled, operated, and maintained in accordance with the Operator's manual furnished with the product, and has not been subject to misuse, abuse, commercial use, neglect, accident, improper maintenance, alteration, vandalism, theft, fire, water, or damage because of other peril or natural disaster.

Normal Wear Parts or components thereof are subject to separate terms as follows: All normal wear parts or component failures will be covered on the product for a period of 90 days.

Parts found to be defective within the warranty period will be replaced at our expense. Our obligation under this warranty is expressly limited to the replacement or repair, at our option, of parts found to be defective in material and workmanship.

HOW TO OBTAIN SERVICE: Warranty parts replacements are available, ONLY WITH PROOF OF PURCHASE, through our Customer Service Department. Call 877-728-8224.

This limited warranty does not provide coverage in the following cases:

a) Routine maintenance items such as lubricants and filters.
b) Normal deterioration of the exterior finish due to use or exposure.
c) Transportation and/or labor charges.
d) The warranty does not include commercial and/or rental use.

No implied warranty, including any implied warranty of merchantability of fitness for a particular purpose, applies after the applicable period of express written warranty above as to the part as identified below. No other express warranty whether written or oral, except as mentioned above, given by any person or entity, including a dealer or retailer, with respect to any product, shall bind Brinly-Hardy Co. During the period of the warranty, the exclusive remedy is repair or replacement of the product as set forth above.

The provisions as set forth in this warranty provide the sole and exclusive remedy arising from the sale. Brinly-Hardy Co. shall not be liable for incidental or consequential loss or damage including, without limitation, expenses incurred for substitute or replacement lawn care services or for rental expenses to temporarily replace a warranted product.

Some states do not allow the exclusion or limitation of incidental or consequential damages, or limitations on how long an implied warranty lasts, so the above exclusions or limitations may not apply to you.

During the warranty period, the exclusive remedy is replacement of the part. In no event shall recovery of any kind be greater that the amount of the purchase price of the product sold. Alteration of safety features of the product shall void this warranty. You assume the risk and liability for loss, damage, or injury to you and your property and/or to others and their property arising out of the misuse or inability to use this product.

This limited warranty shall not extend to anyone other than the original purchaser or to the person for whom it was purchased as a gift.

HOW STATE LAW RELATES TO THIS WARRANTY:

This limited warranty gives you specific legal rights, and you may also have other rights which vary from state to state.

IMPORTANT:

The Warranty period stated below begins with the PROOF OF PURCHASE. Without the proof of purchase, the Warranty period begins from the date of manufacture determined by the serial number manufacturing date.

WARRANTY PERIOD:

The warranty period for the product shown in this manual is as follows: Steel Frame Parts: 2 Years. Tires, Wheels and Drive are normal wear parts - 90 days.